Handbook of

Bearing and Spring Mechanics

Ann Desjardins

Maurice Kendall

First Edition, 2012

ISBN 978-81-323-0896-6

Published by:
Academic Studio
4735/22 Prakashdeep Bldg,
Ansari Road, Darya Ganj,
Delhi - 110002
Email: info@wtbooks.com

Table of Contents

Chapter 1

Bearing (Mechanical)

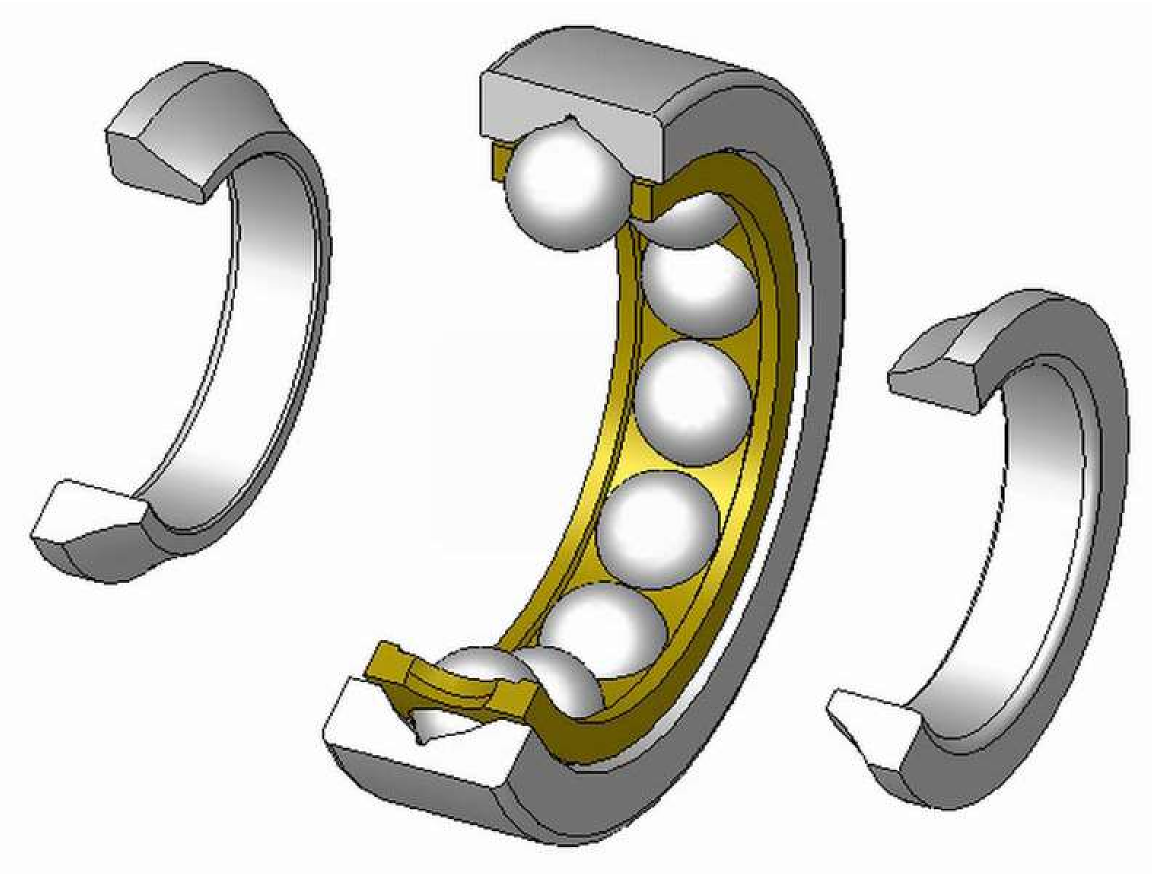

A cutaway example of a four-point contact ball bearing

A **bearing** is a device to allow constrained relative motion between two or more parts, typically rotation or linear movement. Bearings may be classified broadly according to the motions they allow and according to their principle of operation as well as by the directions of applied loads they can handle.

Overview

Plain bearings use surfaces in rubbing contact, often with a lubricant such as oil or graphite. A plain bearing may or may not be a discrete device. It may be nothing more than the bearing surface of a hole with a shaft passing through it, or of a planar surface that bears another (in these cases, not a discrete device); or it may be a layer of bearing metal either fused to the substrate (semi-discrete) or in the form of a separable sleeve (discrete). With suitable lubrication, plain bearings often give entirely acceptable accuracy, life, and friction at minimal cost. Therefore, they are very widely used.

However, there are many applications where a more suitable bearing can improve efficiency, accuracy, service intervals, reliability, speed of operation, size, weight, and costs of purchasing and operating machinery.

Thus, there are many types of bearings, with varying shape, material, lubrication, principle of operation, and so on. For example, rolling-element bearings use spheres or drums rolling between the parts to reduce friction; reduced friction allows tighter tolerances and thus higher precision than a plain bearing, and reduced wear extends the time over which the machine stays accurate. Plain bearings are commonly made of varying types of metal or plastic depending on the load, how corrosive or dirty the environment is, and so on. In addition, bearing friction and life may be altered dramatically by the type and application of lubricants. For example, a lubricant may improve bearing friction and life, but for food processing a bearing may be lubricated by an inferior food-safe lubricant to avoid food contamination; in other situations a bearing may be run without lubricant because continuous lubrication is not feasible, and lubricants attract dirt that damages the bearings.

Principles of operation

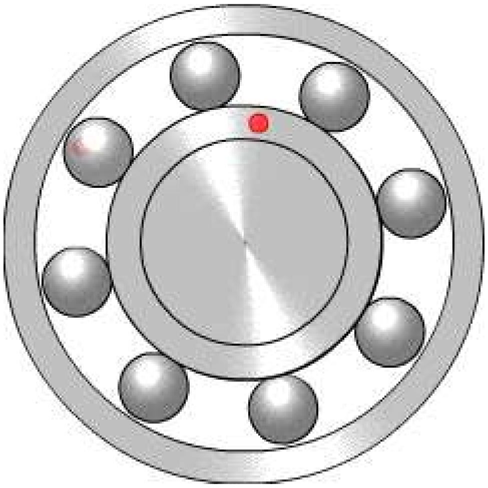

Ball bearing

There are at least six common principles of operation:

- plain bearing, also known by the specific styles: bushings, journal bearings, sleeve bearings, rifle bearings
- rolling-element bearings such as ball bearings and roller bearings
- jewel bearings, in which the load is carried by rolling the axle slightly off-center
- fluid bearings, in which the load is carried by a gas or liquid
- magnetic bearings, in which the load is carried by a magnetic field
- flexure bearings, in which the motion is supported by a load element which bends.

Motions

Common motions permitted by bearings are:

- Axial rotation e.g. shaft rotation
- Linear motion e.g. drawer
- spherical rotation e.g. ball and socket joint
- hinge motion e.g. door, elbow, knee

Friction

Reducing friction in bearings is often important for efficiency, to reduce wear and to facilitate extended use at high speeds and to avoid overheating and premature failure of the bearing. Essentially, a bearing can reduce friction by virtue of its shape, by its material, or by introducing and containing a fluid between surfaces or by separating the surfaces with an electromagnetic field.

- **By shape**, gains advantage usually by using spheres or rollers, or by forming flexure bearings.
- **By material**, exploits the nature of the bearing material used. (An example would be using plastics that have low surface friction.)
- **By fluid**, exploits the low viscosity of a layer of fluid, such as a lubricant or as a pressurized medium to keep the two solid parts from touching, or by reducing the normal force between them.
- **By fields**, exploits electromagnetic fields, such as magnetic fields, to keep solid parts from touching.

Combinations of these can even be employed within the same bearing. An example of this is where the cage is made of plastic, and it separates the rollers/balls, which reduce friction by their shape and finish.

Loads

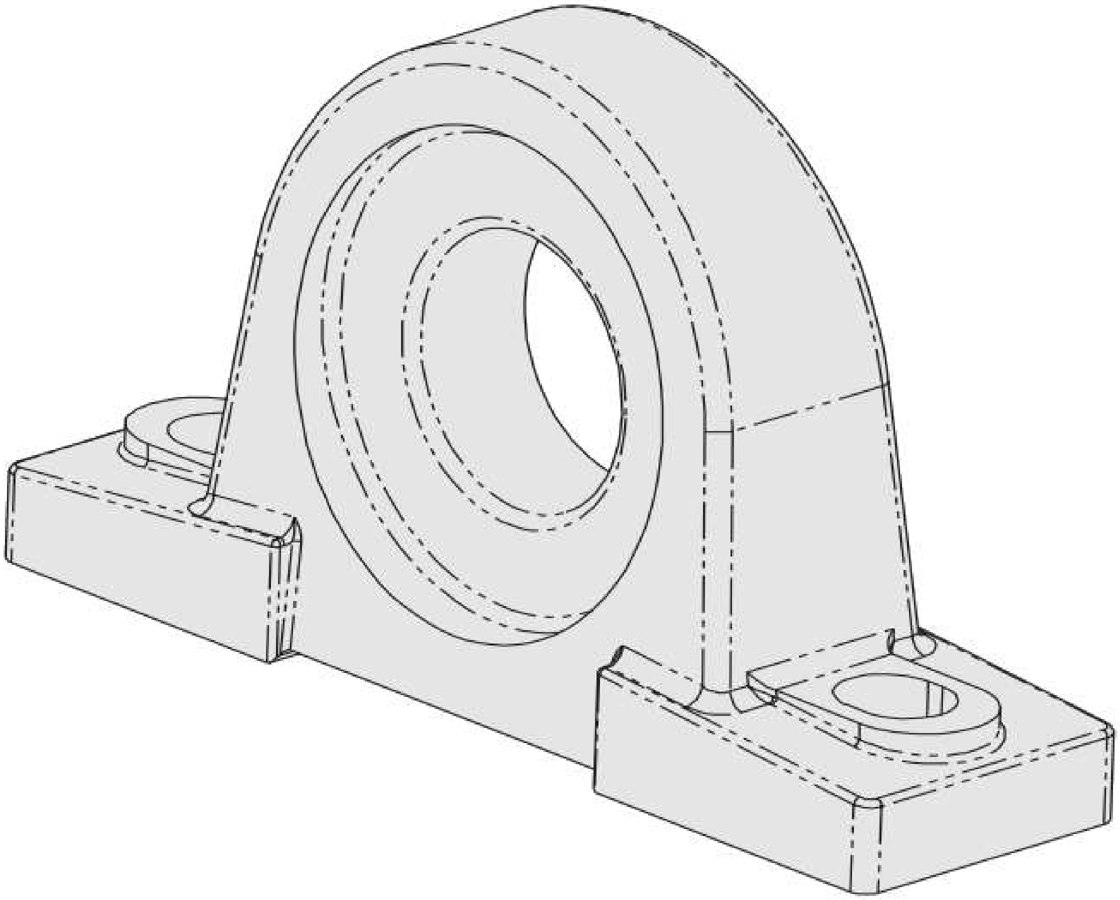

A block bearing with provisions for fixing it

Bearings vary greatly over the size and directions of forces that they can support.

Forces can be predominately radial, axial (thrust bearings) or Bending moments perpendicular to the main axis.

Speeds

Different bearing types have different operating speed limits. Speed is typically specified as maximum relative surface speeds, often specified ft/s or m/s. Rotational bearings typically describe performance in terms of the product *DN* where *D* is the diameter (often in mm) of the bearing and *N* is the rotation rate in revolutions per minute.

Generally there is considerable speed range overlap between bearing types. Plain bearings typically handle only lower speeds, rolling element bearings are faster, followed by fluid bearings and finally magnetic bearings which are limited ultimately by centripetal force overcoming material strength.

Play

Some applications apply bearing loads from varying directions and accept only limited play or "slop" as the applied load changes. One source of motion is gaps or "play" in the bearing. For example, a 10 mm shaft in a 12 mm hole has 2 mm play.

Allowable play varies greatly depending on the use. As example, a wheelbarrow wheel supports radial and axial loads. Axial loads may be hundreds of newtons force left or right, and it is typically acceptable for the wheel to wobble by as much as 10 mm under the varying load. In contrast, a lathe may position a cutting tool to ±0.02 mm using a ball lead screw held by rotating bearings. The bearings support axial loads of thousands of newtons in either direction, and must hold the ball lead screw to ±0.002 mm across that range of loads.

Stiffness

A second source of motion is elasticity in the bearing itself. For example, the balls in a ball bearing are like stiff rubber, and under load deform from round to a slightly flattened shape. The race is also elastic and develops a slight dent where the ball presses on it.

The stiffness of a bearing is how the distance between the parts which are separated by the bearing varies with applied load. With rolling element bearings this is due to the strain of the ball and race. With fluid bearings it is due to how the pressure of the fluid varies with the gap (when correctly loaded, fluid bearings are typically stiffer than rolling element bearings).

Service life

Fluid and magnetic bearings can have practically indefinite service lives. In practice, there are fluid bearings supporting high loads in hydroelectric plants that have been in nearly continuous service since about 1900 and which show no signs of wear.

Rolling element bearing life is determined by load, temperature, maintenance, lubrication, material defects, contamination, handling, installation and other factors. These factors can all have a significant effect on bearing life. For example, the service life of bearings in one application was extended dramatically by changing how the bearings were stored before installation and use, as vibrations during storage caused lubricant failure even when the only load on the bearing was its own weight; the resulting damage is often false brinelling. Bearing life is statistical: several samples of a given bearing will often exhibit a bell curve of service life, with a few samples showing significantly better or worse life. Bearing life varies because microscopic structure and contamination vary greatly even where macroscopically they seem identical.

For plain bearings some materials give much longer life than others. Some of the John Harrison clocks still operate after hundreds of years because of the *lignum vitae* wood employed in their construction, whereas his metal clocks are seldom run due to potential wear.

Flexure bearings bend a piece of material repeatedly. Some materials fail after repeated bending, even at low loads, but careful material selection and bearing design can make flexure bearing life indefinite.

Although long bearing life is often desirable, it is sometimes not necessary. Harris describes a bearing for a rocket motor oxygen pump that gave several hours life, far in excess of the several tens of minutes life needed.

Bearings are often manufactured to what is called an "L10" life factor.

Maintenance

Many bearings require periodic maintenance to prevent premature failure, although some such as fluid or magnetic bearings may require little maintenance.

Most bearings in high cycle operations need periodic lubrication and cleaning, and may require adjustment to minimise the effects of wear.

Bearing life is often much better when the bearing is kept clean and well-lubricated. However, many applications make good maintenance difficult. For example bearings in the conveyor of a rock crusher are exposed continually to hard abrasive particles. Cleaning is of little use because cleaning is expensive, yet the bearing is contaminated again as soon as the conveyor resumes operation. Thus, a good maintenance program might lubricate the bearings frequently but clean them never.

History

Tapered bearings

Early Timken tapered roller bearing with notched rollers

The oldest instance of the bearing principle dates to the Egyptians when they used tree trunks under sleds. There are also Egyptian drawings of bearings used with hand drills.

The earliest recovered example of a bearing is a wooden ball bearing supporting a rotating table from the remains of the Roman Nemi ships in Lake Nemi, Italy. The wrecks were dated to 40 AD.

Leonardo da Vinci is often credited with drawing the first roller bearing around the year 1500. However, Agostino Ramelli is the first to have published sketches of roller and thrust bearings. An issue with ball and roller bearings is that the balls or rollers rub against each other causing additional friction which can be prevented by enclosing the balls or rollers in a cage. The captured, or caged, ball bearing was originally described by

Galileo in the 17th century. The mounting of bearings into a set was not accomplished for many years after that. The first patent for a ball race was by Philip Vaughan of Carmarthen in 1794.

Bearings saw use for holding wheel and axles. The bearings used there were plain bearings that were used to greatly reduce friction over that of dragging an object by making the friction act over a shorter distance as the wheel turned.

The first plain and rolling-element bearings were wood closely followed by bronze. Over their history bearings have been made of many materials including ceramic, sapphire, glass, steel, bronze, other metals and plastic (e.g., nylon, polyoxymethylene, polytetrafluoroethylene, and UHMWPE) which are all used today.

Watch makers produced "jeweled" pocket watches using sapphire plain bearings to reduce friction thus allowing more precise time keeping.

Even basic materials can have good durability. As examples, wooden bearings can still be seen today in old clocks or in water mills where the water provides cooling and lubrication.

The first practical caged-roller bearing was invented in the mid-1740s by horologist John Harrison for his H3 marine timekeeper. This uses the bearing for a very limited oscillating motion but Harrison also used a similar bearing in a truly rotary application in a contemporaneous regulator clock.

A patent on ball bearings, reportedly the first, was awarded to Jules Suriray, a Parisian bicycle mechanic, on 3 August 1869. The bearings were then fitted to the winning bicycle ridden by James Moore in the world's first bicycle road race, Paris-Rouen, in November 1869.

Friedrich Fischer's idea from the year 1883 for milling and grinding balls of equal size and exact roundness by means of a suitable production machine formed the foundation for creation of an independent bearing industry.

The modern, self-aligning design of ball bearing is attributed to Sven Wingquist of the SKF ball-bearing manufacturer in 1907, when he was awarded Swedish patent No. 25406 on its design.

Henry Timken, a 19th century visionary and innovator in carriage manufacturing, patented the tapered roller bearing, in 1898. The following year, he formed a company to produce his innovation. Through a century, the company grew to make bearings of all types, specialty steel and an array of related products and services.

Erich Franke invented and patented the wire race bearing in 1934. His focus was on a bearing design with a cross section as small as possible and which could be integrated into the enclosing design. After World War II he founded together with Gerhard

Heydrich the company Franke & Heydrich KG (today Franke GmbH) to push the development and production of wire race bearings.

Richard Stribeck's extensive research on ball bearing steels identified the metallurgy of the commonly used 100Cr6 (AISI 52100) showing coefficient of friction as a function of pressure.

Designed in 1968 and later patented in 1972, Bishop-Wisecarver's co-founder Bud Wisecarver created vee groove bearing guide wheels, a type of linear motion bearing consisting of both an external and internal 90 degree vee angle.

In the early 1980s, Pacific Bearing's founder, Robert Schroeder, invented the first bi-material plain bearing which was size interchangeable with linear ball bearings. This bearing had a metal shell (aluminum, steel or stainless steel) and a layer of Teflon-based material connected by a thin adhesive layer.

Today ball and roller bearings are used in many applications which include a rotating component. Examples include ultra high speed bearings in dental drills, aerospace bearings in the Mars Rover, gearbox and wheel bearings on automobiles, flexure bearings in optical alignment systems and bicycle wheel hubs.

Types

There are many different types of bearings.

Type	Description	Friction	Stiffness†	Speed	Life	Notes
Plain bearing	Rubbing surfaces, usually with lubricant; some bearings use pumped lubrication and behave similarly to fluid bearings.	Depends on materials and construction, PTFE has coefficient of friction ~0.05-0.35, depending upon fillers added	Good, provided wear is low, but some slack is normally present	Low to very high	Low to very high - depends upon application and lubrication	Widely used, relatively high friction, suffers from stiction in some applications. Depending upon the application, lifetime can be higher or lower than rolling element bearings.
Rolling element bearing	Ball or rollers are used to prevent or minimise rubbing	Rolling coefficient of friction with steel can be ~0.005 (adding resistance due to seals, packed grease, preload and misalignment can increase friction to as much as 0.125)	Good, but some slack is usually present	Moderate to high (often requires cooling)	Moderate to high (depends on lubrication, often requires maintenance)	Used for higher moment loads than plain bearings with lower friction
Jewel bearing	Off-center bearing rolls in seating	Low	Low due to flexing	Low	Adequate (requires maintenance)	Mainly used in low-load, high precision work such as clocks. Jewel bearings may be very small.

Fluid bearing	Fluid is forced between two faces and held in by edge seal	Zero friction at zero speed, low	Very high	Very high (usually limited to a few hundred feet per second at/by seal)	Virtually infinite in some applications, may wear at startup/shutdown in some cases. Often negligible maintenance.	Can fail quickly due to grit or dust or other contaminants. Maintenance free in continuous use. Can handle very large loads with low friction.
Magnetic bearings	Faces of bearing are kept separate by magnets (electromagnets or eddy currents)	Zero friction at zero speed, but constant power for levitation, eddy currents are often induced when movement occurs, but may be negligible if magnetic field is quasi-static	Low	No practical limit	Indefinite. Maintenance free. (with electromagnets)	Active magnetic bearings (AMB) need considerable power. Electrodynamic bearings (EDB) do not require external power.
Flexure bearing	Material flexes to give and constrain movement	Very low	Low	Very high.	Very high or low depending on materials and strain in application. Usually maintenance free.	Limited range of movement, no backlash, extremely smooth motion

---

[†] Stiffness is the amount that the gap varies when the load on the bearing changes, it is distinct from the friction of the bearing.

Chapter 2

Plain Bearing

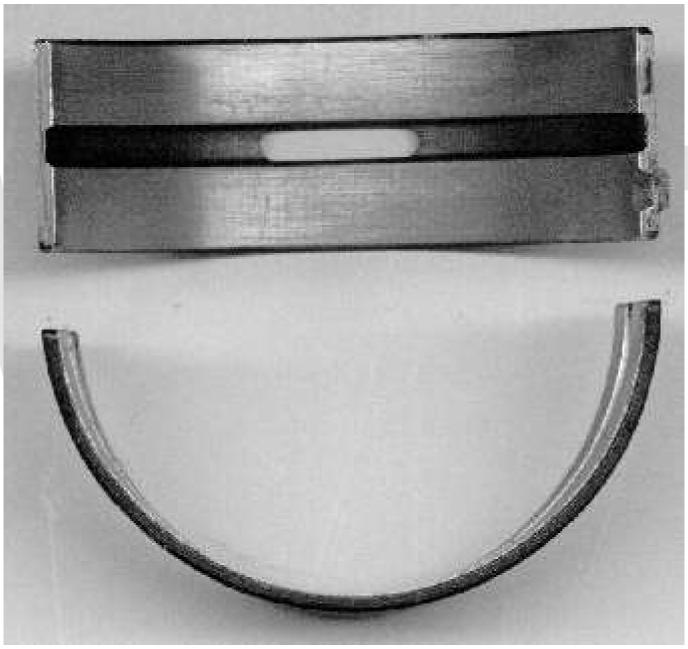

Crankshaft plain bearing shells

A **plain bearing**, also known as a **plane bearing**, is the simplest type of bearing, comprising just a bearing surface and no rolling elements. Therefore the journal (*i.e.*, the part of the shaft in contact with the bearing) slides over the bearing surface. The simplest example of a plain bearing is a shaft rotating in a hole. A simple linear bearing can be a pair of flat surfaces designed to allow motion; *e.g.*, a drawer and the slides it rests on or the ways on the bed of a lathe.

Plain bearings, in general, are the least expensive type of bearing. They are also compact, light weight, and have a high load-carrying capacity.

Design

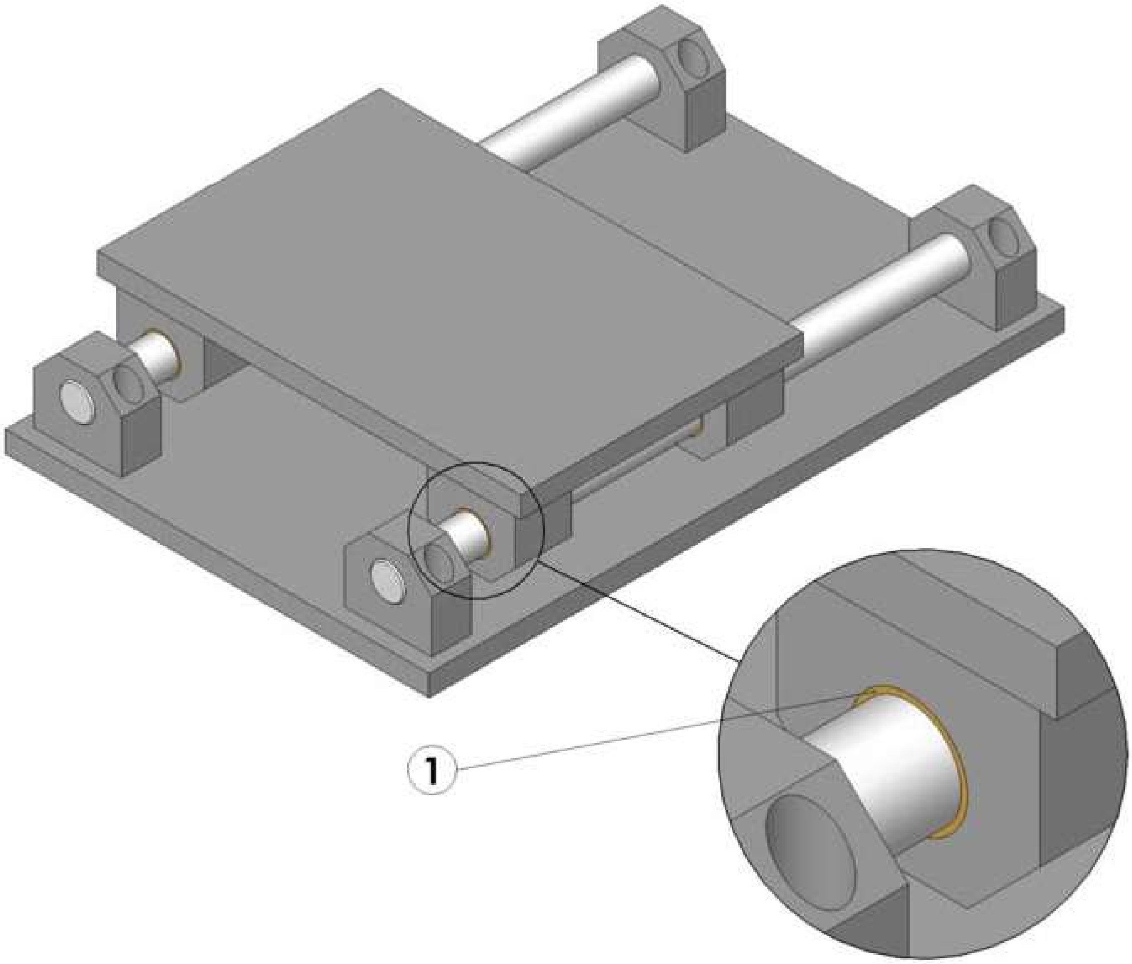

A linear table with four linear bearings (1)

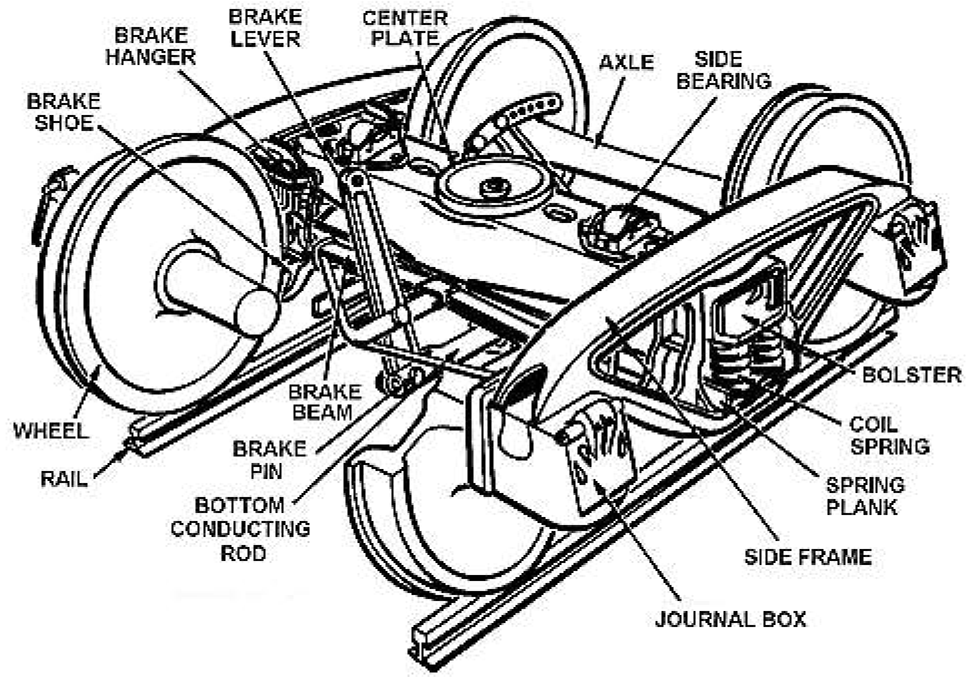

Journal bearing and journal box found on a US-style railroad truck

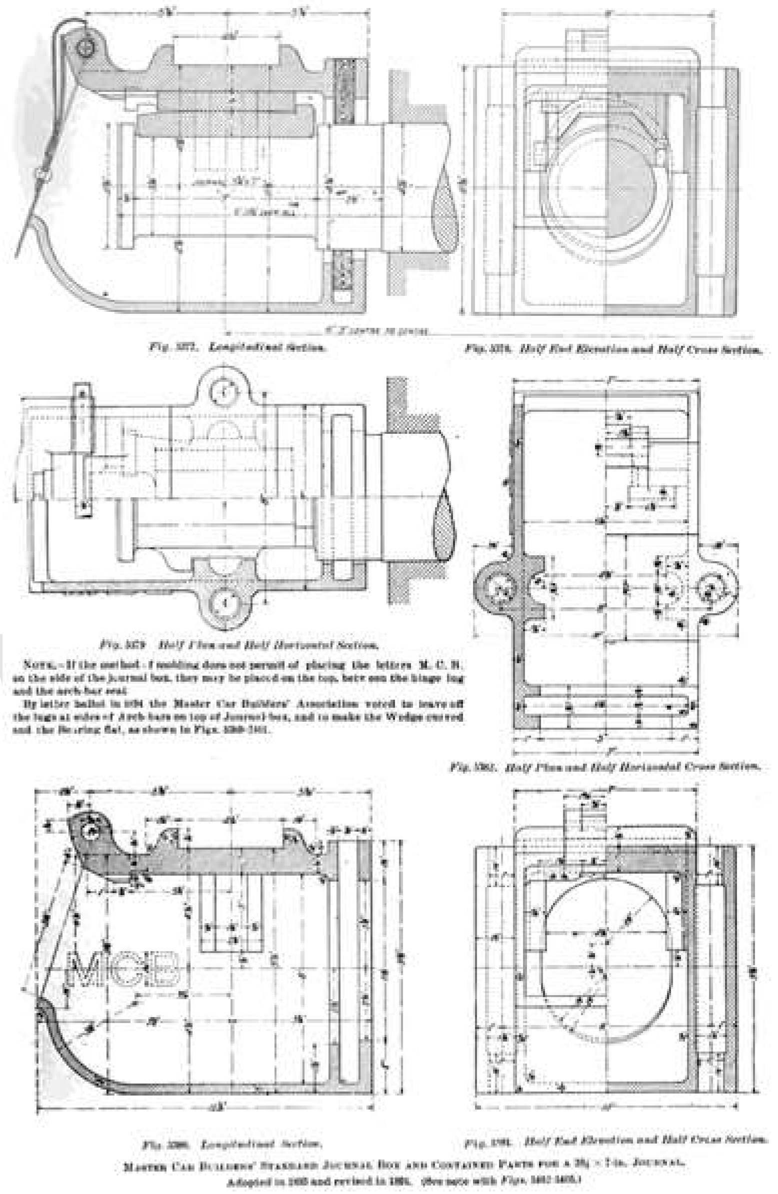

Journal box

The design of a plain bearing depends on the type of motion the bearing must provide. The three types of motions possible are:

- *Journal* (*friction*, *radial* or *rotary*) *bearing*: This is the most common type of plain bearing; it is simply a shaft rotating in a bearing.
  - In locomotive applications a *journal bearing* specifically refers to the plain bearing found at the ends of the axles of railroad wheel sets, which are enclosed by *journal boxes*.
- *Linear bearing*: This bearing provides linear motion; it may take the form of a circular bearing and shaft or two matching surfaces (*e.g.*, a slide plate).

- *Thrust bearing*: A thrust bearing provides a bearing surface for forces acting axial to the shaft.

Integral

Integral plain bearings are built into the object of use. It is a hole that has been prepared into a bearing surface. Industrial integral bearings are usually made from cast iron or babbitt and a hardened steel shaft is used in the bearing.

Integral bearings are not as common because bushings are easy to accommodate and if they wear out then they are just replaced. Depending on the material an integral bearing may be less expensive but it cannot be replaced. If an integral bearing wears out then the item may be replaced or reworked to accept a bushing. Integral bearings were very common in 19th-century machinery but became progressively less common as interchangeable manufacture permeated the industry.

An example of a common integral plain bearing is the hinge, which is both a thrust bearing and a journal bearing.

Bushing

A *bushing*, also known as a *bush*, is an independent plain bearing that is inserted into a housing to provide a bearing surface for rotary applications; this is the most common form of a plain bearing. Common designs include *solid* (*sleeve* and *flanged*), *split*, and *clenched* bushings. A sleeve, split, or clenched bushing is only a "sleeve" of material with an inner diameter (ID), outer diameter (OD), and length. The difference between the three types is that a solid sleeved bushing is solid all the way around, a split bushing has a cut along its length, and a clenched bearing is similar to a split bushing but with a clench across the cut. A flanged bushing is a sleeve bushing with a flange extending radially outward from the ID. The flange is used to positively locate the bushing when it is installed or to provide a thrust bearing surface.

Sleeve bearings of inch dimensions are almost exclusively dimensioned using the SAE numbering system. The numbering system uses the format -XXYY-ZZ, where XX is the ID in sixteenths of an inch, YY is the OD in sixteenths of an inch, and ZZ is the length in eights of an inch. Metric sizes also exist.

A linear bushing is not usually pressed into a housing, but rather secured with a radial feature. Two such examples include two retaining rings, or a ring that is molded onto the OD of the bushing that matches with a groove in the housing. This is usually a more durable way to retain the bushing, because the forces acting on the bushing could press it out.

The thrust form of a bushing is conventionally called a *thrust washer*.

A solid sleeve bushing

A flanged bushing

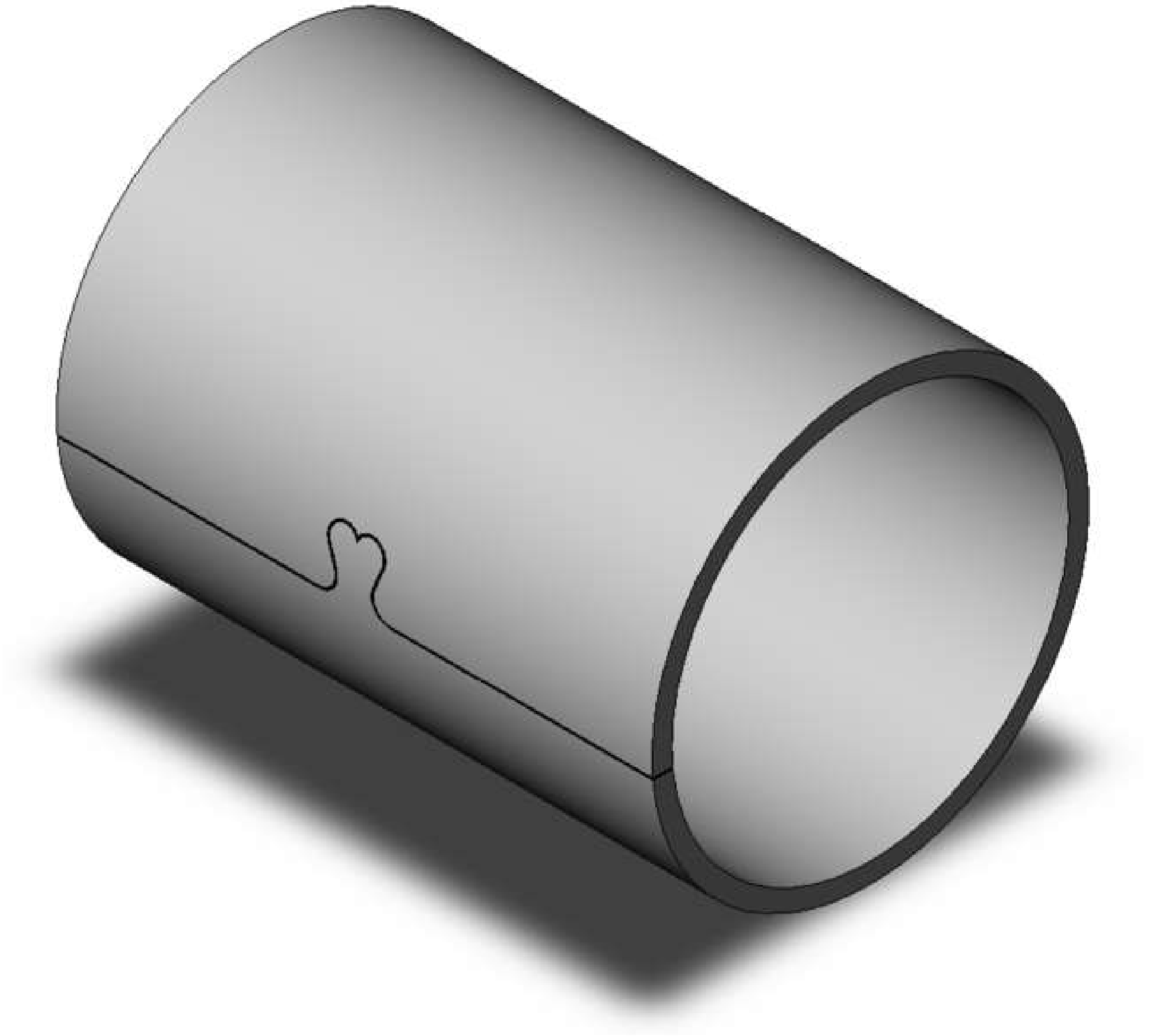

A clenched bushing

Two-piece

Two-piece plain bearings, known as *full bearings* in industrial machinery, are commonly used for larger diameters, such as crankshaft bearings. The two halves are called *shells*. There are various system used to keep the shells located. The most common method is a tab on the parting line edge that correlates with a notch in the housing to prevent axial movement after installation. For large, thick shells a button stop or dowel pin is used. The button stop is screwed to the housing, while the dowel pin keys the two shells together. Another less common method uses a dowel pin that keys the shell to the housing through a hole or slot in the shell.

The distance from one parting edge to the other is slightly larger than the corresponding distance in the housing so that a light amount of pressure is required to install the bearing. This keeps the bearing in place as the two halves of the housing are installed. Finally, the shell's circumference is also slightly larger than the housing circumference so that when the two halves are bolted together the bearing *crushes* slightly. This creates a large amount of radial force around the entire bearing which keeps it from *spinning*. It also forms a good interface for heat to travel out of the bearings into the housing.

Materials

Plain bearings must be made from a material that is durable, low friction, low wear to the bearing and shaft, resistant to elevated temperatures, and corrosion resistant. Often the bearing is made up of at least two constituents, where one is soft and the other is hard. The hard constituent supports the load while the soft constituent supports the hard constituent. In general, the harder the surfaces in contact the lower the coefficient of friction and the greater the pressure required for the two to seize.

Babbitt

Babbitt is usually used in integral bearings. It is coated over the bore, usually to a thickness of 1 to 100 thou (0.025 to 2.5 mm), depending on the diameter. Babbitt bearings are designed to not damage the journal during direct contact and to collect any contaminants in the lubrication.

Bi-material

Split bi-material bushings: a metal exterior with an inner plastic coating

Bi-material bearings consist of two materials, a metal shell and a plastic bearing surface. Common combinations include a steel-backed PTFE-coated bronze and aluminum-backed Frelon. Steel-backed PTFE-coated bronze bearings are rated for more load than most other bi-metal bearings and are used for rotary and oscillating motions. Aluminum-backed frelon are commonly used in corrosive environments because the Frelon is chemically inert.

Bearing properties of various bi-material bearings

	Temperature range	P (max.) [psi (MPa)]	V (max.) [sfm (m/s)]	PV (max.) [psi sfm (MPa m/s)]
Steel-backed PTFE-coated bronze	-328–536 °F / -200–280 °C	36,000 psi/248 MPa	390 (2.0 m/s)	51,000 (1.79 MPa m/s)
Aluminum-backed frelon	-400–400 °F / -240–204 °C	3,000 psi/21 MPa	300 (1.52 m/s)	20,000 (0.70 MPa m/s)

Bronze

A common plain bearing design utilizes a hardened and polished steel shaft and a softer bronze bushing. The bushing is replaced whenever it has worn too much.

Common bronze alloys used for bearings include: SAE 841, SAE 660 (CDA 932), SAE 863, and CDA 954.

Bearing properties of various bronze alloys

	Temperature range	P (max.) [psi (MPa)]	V (max.) [sfm (m/s)]	PV (max.) [psi sfm (MPa m/s)]
SAE 841	10–220 °F (-12–104 °C)	2,000 psi (14 MPa)	1,200 (6.1 m/s)	50,000 (1.75 MPa m/s)
SAE 660	10–450 °F (-12–232 °C)	4,000 psi (28 MPa)	750 (3.8 m/s)	75,000 (2.63 MPa m/s)
SAE 863	10–220 °F (-12–104 °C)	4,000 psi (28 MPa)	225 (1.14 m/s)	35,000 (1.23 MPa m/s)
CDA 954	Less than 500 °F (260 °C)	4,500 psi (31 MPa)	225 (1.14 m/s)	125,000 (4.38 MPa m/s)

Cast iron

A cast iron bearing is commonly used with a hardened steel shaft because the coefficient of friction is relatively low. The cast iron glazes over therefore wear becomes negligible.

Graphite

In harsh environments, such as ovens and dryers, a copper and graphite alloy, commonly known by the trademarked name graphalloy, is used. The graphite is a dry lubricant, therefore it is low friction and low maintenance. The copper adds strength, durability, and provides heat dissipation characteristics.

Bearing properties of graphitic materials

	Temperature range	**P (max.) [psi (MPa)]**	**V (max.) [sfm (m/s)]**	**PV (max.) [psi sfm (MPa m/s)]**
Graphalloy	-450–750 °F / -268–399 °C	750 psi/5 MPa	75 (0.38 m/s)	12,000 (0.42 MPa m/s)
Graphite	?	?	?	?

Unalloyed graphite bearings are used in special applications, such as locations that are submerged in water.

Jewels

Known as *jewel bearings*, these bearings use jewels, such as sapphire, ruby, and garnet.

Plastic

Solid plastic plain bearings are now increasingly popular due to dry-running lubrication-free behavior. Solid polymer plain bearings are low weight, corrosion resistant, and maintenance free. After research spanning decades, an accurate calculation of the service life of polymer plain bearings is possible today. Designing with solid polymer plain bearings is complicated by the wide range, and non-linearity, of coefficient of thermal expansion. These materials can heat rapidly when loaded.

Solid polymer type bearings are limited by the injection molding process. Not all shapes are possible with this process and the shapes which are possible are limited to what is considered good design practice for injection molding. Plastic bearings are subject to the same design cautions as all other plastic parts: creep, high thermal expansion, softening (increased wear/reduced life) at elevated temperature, brittle fractures at cold temperatures, swelling due to moisture absorption. While most bearing-grade plastics/polymers are designed to reduce these design cautions, they still exist and should be carefully considered before specifying an a solid polymer (plastic) type.

Plastic bearings are now everywhere from photocopy machines to the tills in the supermarket. Other applications include farm equipment, textile machinery, medical devices, food and packaging machines, car seating, marine equipment and many more.

Common plastics include nylon, polyacetal, polytetrafluoroethylene (PTFE), ultra high molecular weight polyethylene (UHMWPE), rulon, PEEK, urethane and vespel (a high-performance polyimide).

Bearing properties of various plastics

	Temperature range	**P (max.) [psi (MPa)]**	**V (max.) [sfm (m/s)]**	**PV (max.) [psi sfm (MPa m/s)]**
Frelon	-400–500 °F (-240–260 °C)	1,500 (10)	140 (0.71) (dry)	10,000 (0.35)
Nylon	-20–250 °F (-29–121 °C)	400 psi (3 MPa)	360 (1.83 m/s)	3,000 (0.11 MPa m/s)
MDS-filled nylon blend 1	-40–176 °F (-40–80 °C)	2,000 psi (14 MPa)	393 (2.0 m/s)	3,400 (0.12 MPa m/s)
MDS-filled nylon blend 2	-40–230 °F (-40–110 °C)	300 psi (2 MPa)	60 (0.30 m/s)	3,000 (0.11 MPa m/s)
PEEK blend 1	-148–480 °F (-100–249 °C)	8,500 psi (59 MPa)	400 (2.0 m/s)	3,500 (0.12 MPa m/s)
PEEK blend 2	-148–480 °F (-100–249 °C)	21,750 psi (150 MPa)	295 (1.50 m/s)	37,700 (1.32 MPa m/s)
Polyacetal	-20–180 °F (-29–82 °C)	1,000 psi (7 MPa)	1,000 (5.1 m/s)	2,700 (0.09 MPa m/s)
PTFE	-350–500 °F (-212–260 °C)	500 psi (3 MPa)	100 (0.51 m/s)	1,000 (0.04 MPa m/s)
Glass-filled PTFE	-350–500 °F (-212–260 °C)	1,000 psi (7 MPa)	400 (2.0 m/s)	11,000 (0.39 MPa m/s)
Rulon 641	-400–500 °F (-240–260 °C)	1,000 psi (7 MPa)	400 (2.0 m/s)	10,000 (0.35 MPa m/s)
Rulon J	-400–500 °F (-240–260 °C)	750 psi (5 MPa)	400 (2.0 m/s)	7,500 (0.26 MPa m/s)
Rulon LR	-400–500 °F (-240–260 °C)	1,000 psi (7 MPa)	400 (2.0 m/s)	10,000 (0.35 MPa m/s)
UHMWPE	-200–180 °F (-129–82 °C)	1,000 psi (7 MPa)	100 (0.51 m/s)	2,000 (0.07 MPa m/s)
MDS-filled urethane	-40–180 °F (-40–82 °C)	700 psi (5 MPa)	200 (1.02 m/s)	11,000 (0.39 MPa m/s)
Vespel	-400–550 °F (-240–288 °C)	4,900 psi (34 MPa)	3,000 (15.2 m/s)	300,000 (10.5 MPa m/s)

Others

- Ceramic bearings are very hard and sand and other grit which enter the bearing are simply ground to a fine powder which does not inhibit the operation of the bearing.
- Lubrite
- Lignum vitae is a self lubricating wood and in clocks it gives extremely long life.

Lubrication

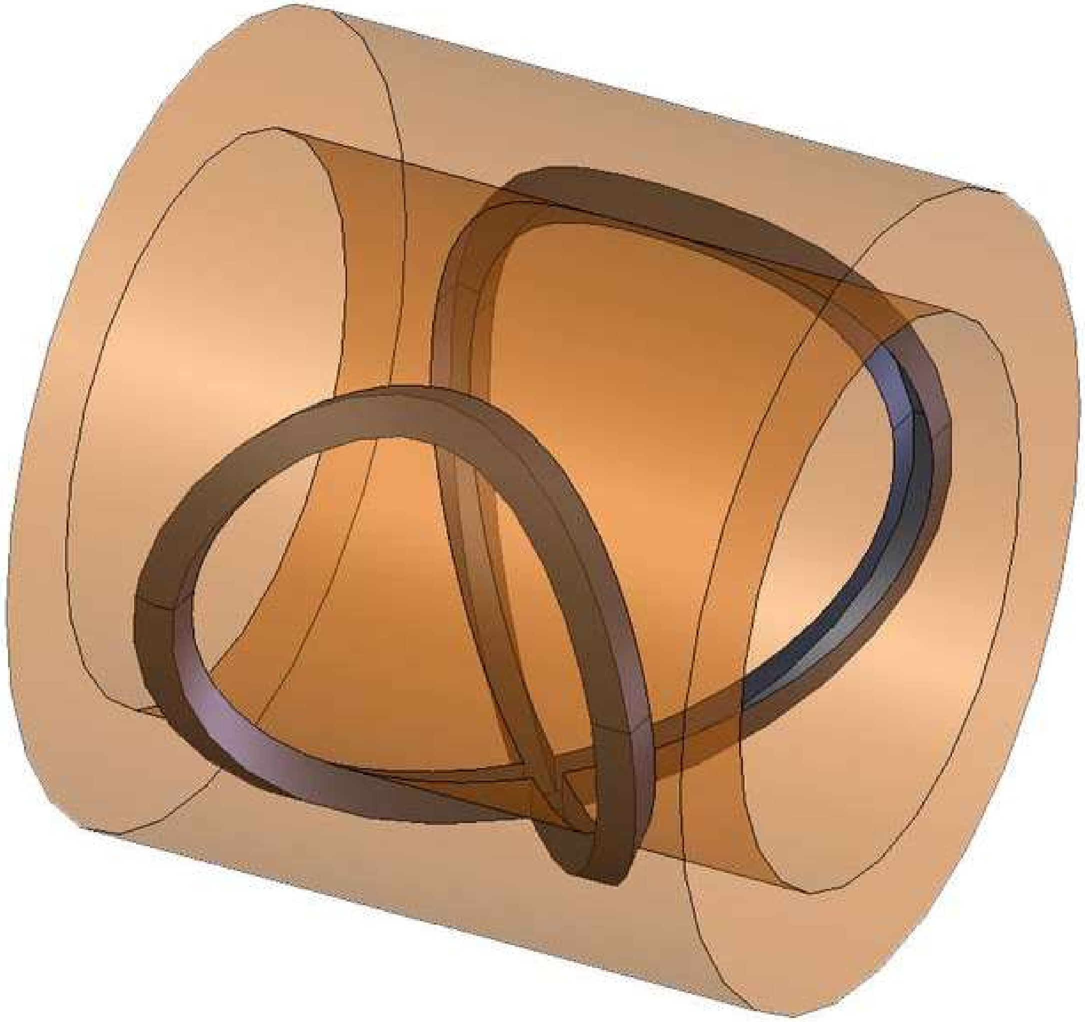

A graphite filled groove bushing

The types of lubrication system can be categorized into three groups:

- **Class I** — bearings that require the application of a lubricant from an external source
- **Class II** — Bearings that contain a lubricant within the walls of the bearing
- **Class III** — bearings made of materials that are the lubricant

Examples of the second type of bearing are Oilites and plastic bearings made from polyacetal; examples of the third type are metalized graphite bearings and PTFE bearings.

Most plain bearings have a plain inner surface, however some are grooved. The grooves help lubrication enter the bearing and cover the whole journal.

Self-lubricating plain bearings have a lubricant contained within the bearing walls. There are many forms of self-lubricating bearings. The first, and most common, are sintered metal bearings, which have porous walls. The porous walls draw oil in via capillary action and release the oil when pressure or heat are applied. Another form is a solid one-piece metal bushing with a figure eight groove channel on the ID that is filled with graphite. A similar bearing replaces the figure eight groove with holes that are plugged with graphite; this allows the bearing to be lubricated inside and out. The last form is a plastic bearing, which has the lubricant molded into the bearing. The lubricant is released as the bearing is run in.

There are three main types of lubrication: *full-film condition*, *boundary condition*, and *dry condition*. Full-film conditions are when the bearing's load is carried solely by a film of fluid lubricant and there is no contact between the two bearing surfaces. In mix or boundary conditions, load is carried partly by direct surface contact and partly by a film forming between the two. In a dry condition, the full load is carried by surface-to-surface contact.

Bearings that are made from bearing grade materials always run in the dry condition. The other two classes of plain bearings can run in all three conditions; the condition in which a bearing runs is dependent on the operating conditions, load, relative surface speed, clearance within the bearing, quality and quantity of lubricant, and temperature (affecting lubricant viscosity). If the plain bearing is not designed to run in the dry or boundary condition it will wear out and have a high coefficient of friction. Dry and boundary conditions may be experienced even in a fluid bearing when operating outside of its normal operating conditions; *e.g.*, at startup and shutdown.

Fluid lubrication

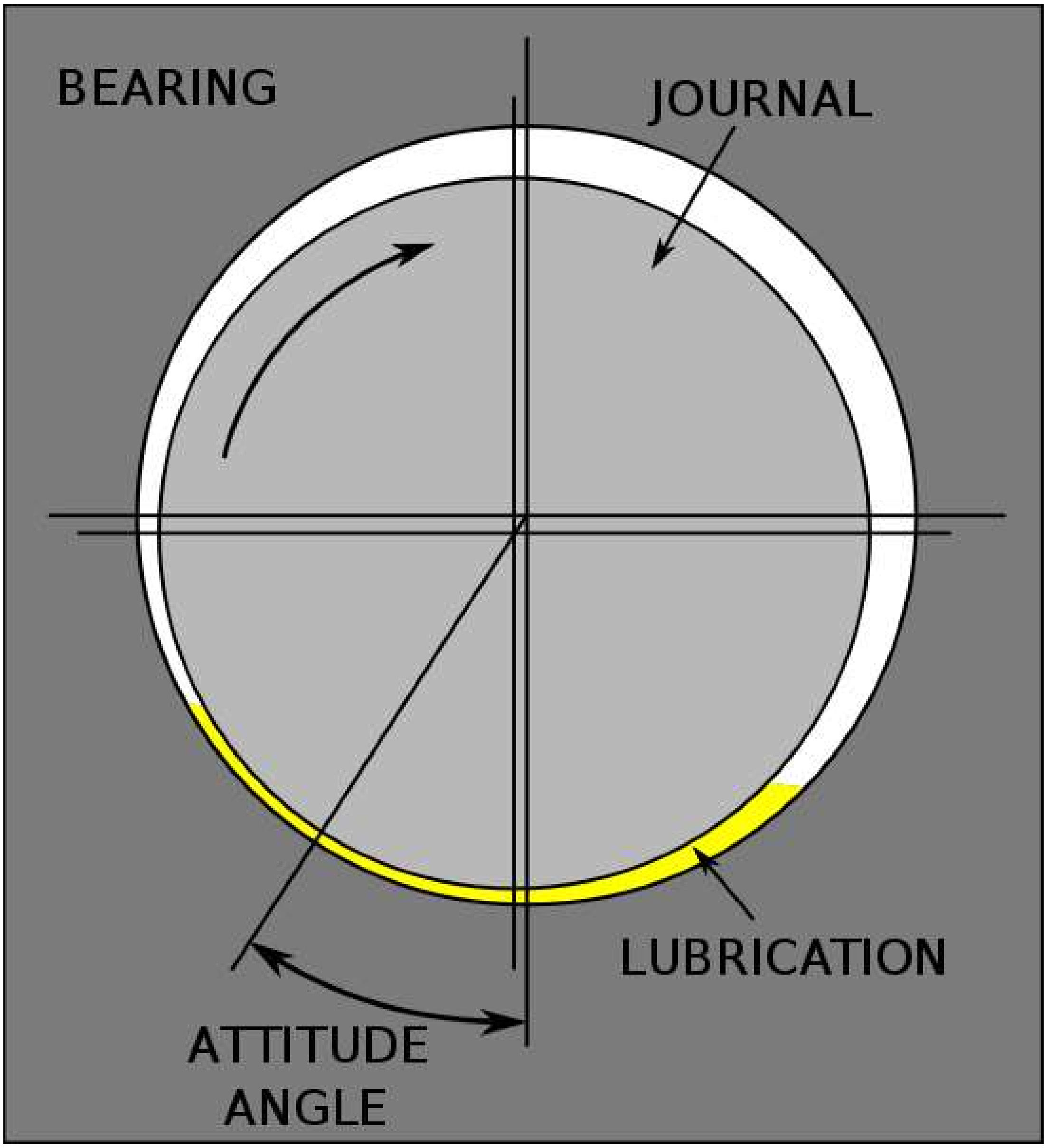

A schematic of a journal bearing under a hydrodynamic lubrication state showing how the journal centerline shifts from the bearing centerline.

Fluid lubrication results in a full-film or a boundary condition lubrication mode. A properly designed bearing system reduces friction by eliminating surface-to-surface contact between the journal and bearing through fluid dynamic effects.

Fluid bearings can be *hydrostatically* or *hydrodynamically* lubricated. Hydrostatically lubricated bearings are lubricated by an external pump which always keeps a *static* amount of pressure. In a hydrodynamic bearing the pressure in the oil film is maintained by the rotation of the journal. Hydrostatic bearings enter a *hydrodynamic state* when the journal is rotating. Hydrostatic bearings almost always use oil, while hydrodynamic bearings can use oil or grease. An example of a hydrostatic bearing is the heavily-loaded bearings (main, connecting rod big-end and camshaft) in an automobile engine, which are usually fed oil via a hole in the bearing.

Hydrodynamic bearings require greater care in design and operation than hydrostatic bearings. They are also more prone to initial wear because lubrication does not occur until there is rotation of the shaft. At low rotational speeds the lubrication may not attain complete separation between shaft and bushing. As a result, hydrodynamic bearings are often aided by secondary bearings which support the shaft during start and stop periods, protecting the fine tolerance machined surfaces of the journal bearing.

In the hydrodynamic state a lubrication "wedge" forms, which lifts the journal. The journal also slightly shifts horizontally in the direction of rotation. The location of the journal is measured by the *attitude angle*, which is angle formed between the horizontal and a line that crosses through the center of the journal and the center of the bearing. The attitude angle is dependent on the direction of rotation, oil pressure (in hydrostatic bearings), and electromagnetic forces (in electromagnetic equipment).

One disadvantage specific to fluid lubricated journal bearings is *oil whirl*, also known as *oil whip*. Oil whirl is when a lubrication wedge cannot form, but instead "whirls" around the bearing. This leads to direct contact between the journal and the bearing, which quickly wears out the bearing. Moreover, the journal precesses in the opposite direction of rotation causing the friction to increase.

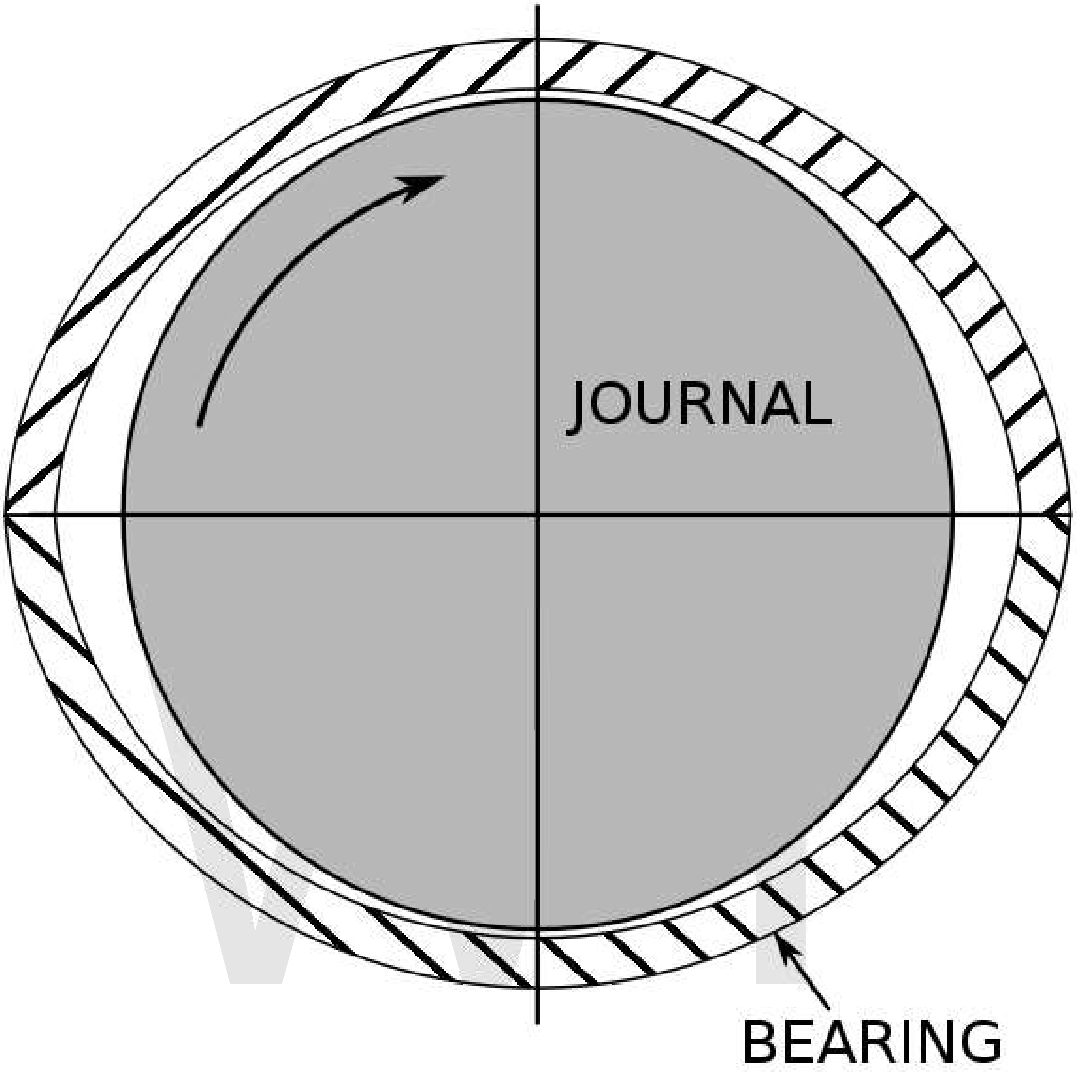

A lemon bore

One design used to minimize this problem is called the *lemon bore* or *elliptical bore*. In this design shims are installed between the two halves of the bearing housing and then the bore is machined to size. After the shims are removed the bore resembles a lemon shape, which decreases the clearance in one direction of the bore and increases the pre-load in this direction. The disadvantage of this design is its lower load carrying capacity, as compared to typical journal bearings. It is also still susceptible to oil whirl at high speeds, however its cost is relatively low.

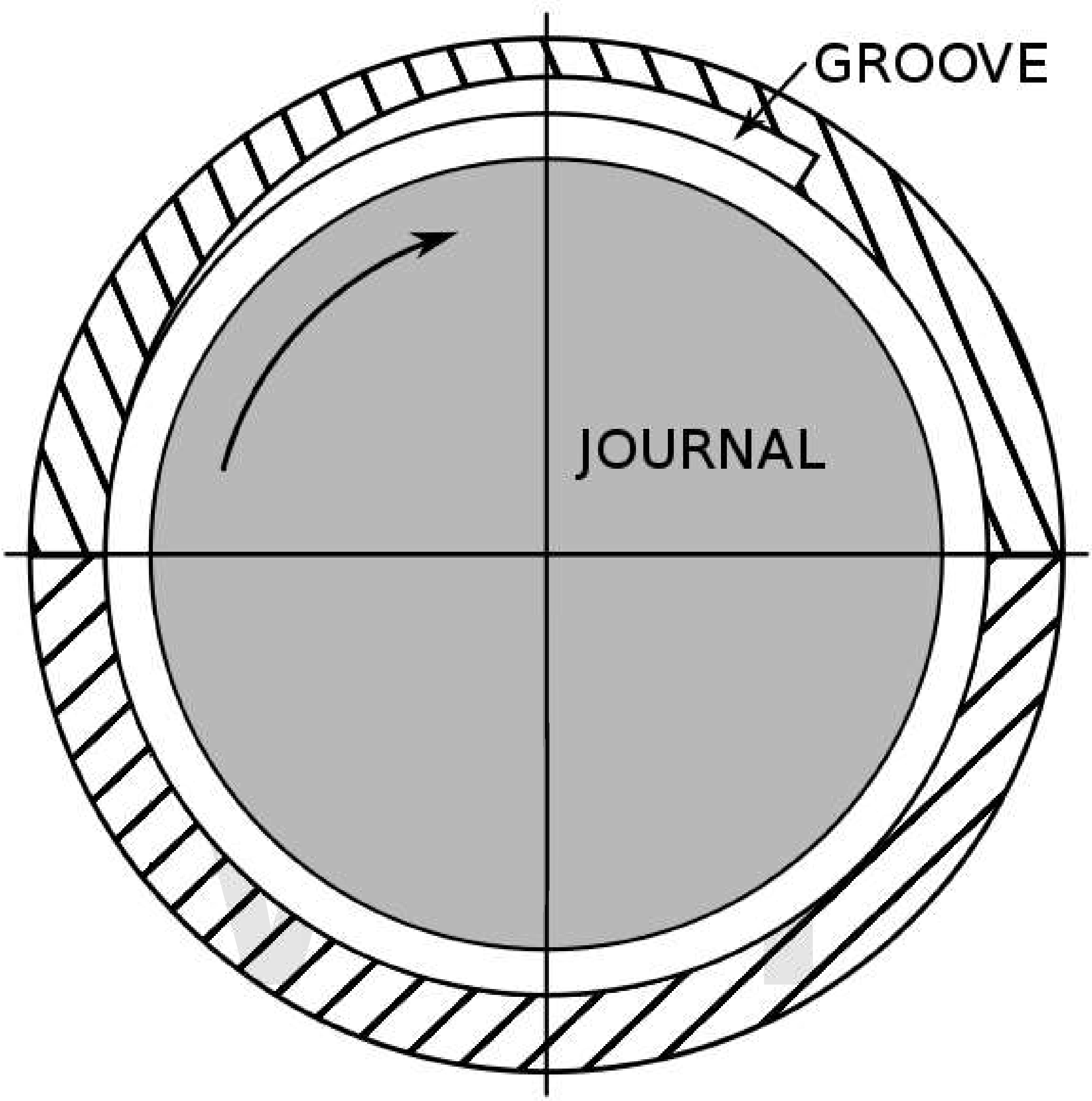

A pressure dam

Another design is the *pressure dam* or *dammed groove*, which has a shallow relief cut in the center of the bearing over the top half of the bearing. The groove abruptly stops in order to create a downward force to stabilize the journal. This design has a high load capacity and corrects most oil whirl situations. The disadvantage is that it only works in one direction. Offsetting the bearing halves does the same thing as the pressure dam. The only difference is the load capacity increases as the offset increases.

A more radical design is the tilting-pad design, which uses multiple pad that are designed to move with changing loads. It is usually used in very large applications.

Related components

Other components that are commonly used with plain bearings include:

- *Pillow block*: These are standardized bearing mounts designed to accept plain bearings. They are designed to mount to a flat surface.
- *Ring oiler*: A lubricating mechanism used in the first half of the 20th century for medium speed applications.
- *Stuffing box*: A sealing system used to keep fluid from leaking out of a pressurized system through the plain bearing.

Chapter 3

Rolling-Element Bearing

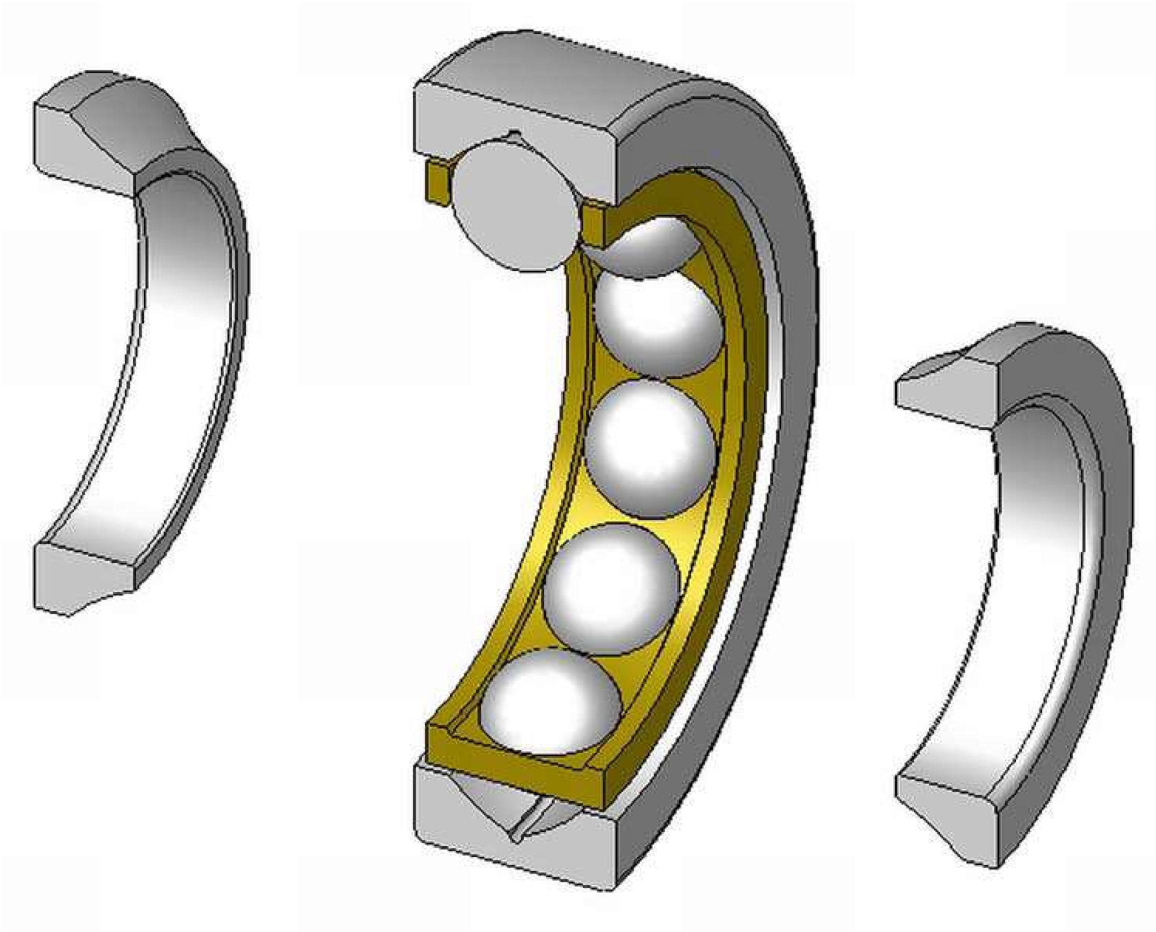

Four-point-contact radial ball bearings

A **rolling-element bearing** is a bearing which carries a load by placing round elements between the two pieces. The relative motion of the pieces causes the round elements to roll with very little rolling resistance and with little sliding.

One of the earliest and best-known rolling-element bearings are sets of logs laid on the ground with a large stone block on top. As the stone is pulled, the logs roll along the ground with little sliding friction. As each log comes out the back, it is moved to the front where the block then rolls on to it. It is possible to imitate such a bearing by placing several pens or pencils on a table and placing an item on top of them.

A rolling-element rotary bearing uses a shaft in a much larger hole, and cylinders called "rollers" tightly fill the space between the shaft and hole. As the shaft turns, each roller acts as the logs in the above example. However, since the bearing is round, the rollers never fall out from under the load.

Rolling-element bearings have the advantage of a good tradeoff between cost, size, weight, carrying capacity, durability, accuracy, friction, and so on. Other bearing designs are often better on one specific attribute, but worse in most other attributes, although fluid bearings can sometimes simultaneously outperform on carrying capacity, durability, accuracy, friction, rotation rate and sometimes cost. Only plain bearings are used as widely as rolling-element bearings.

Design

Typical rolling-element bearings range in size from 10 mm diameter to a few metres diameter, and have load-carrying capacity from a few tens of grams to many thousands of tonnes.

A particularly common kind of rolling-element bearing is the ball bearing. The bearing has inner and outer *races* and a set of balls. Each race is a ring with a groove where the balls rest. The groove is usually shaped so the ball is a slightly loose fit in the groove. Thus, in principle, the ball contacts each race at a single point. However, a load on an infinitely small point would cause infinitely high contact pressure. In practice, the ball deforms (flattens) slightly where it contacts each race, much as a tire flattens where it touches the road. The race also dents slightly where each ball presses on it. Thus, the contact between ball and race is of finite size and has finite pressure. Note also that the deformed ball and race do not roll entirely smoothly because different parts of the ball are moving at different speeds as it rolls. Thus, there are opposing forces and sliding motions at each ball/race contact. Overall, these cause bearing drag.

Most rolling element bearings use *cages* to keep the balls separate. This reduces wear and friction, since it avoids the balls rubbing against each other as they roll, and precludes them from jamming. Caged roller bearings were invented by John Harrison in the mid-18th century as part of his work on chronometers.

Types of rolling elements

There are five types of rolling-elements that are used in rolling element bearings: balls, cylindrical rollers, tapered rollers, spherical rollers, and needles.

Ball

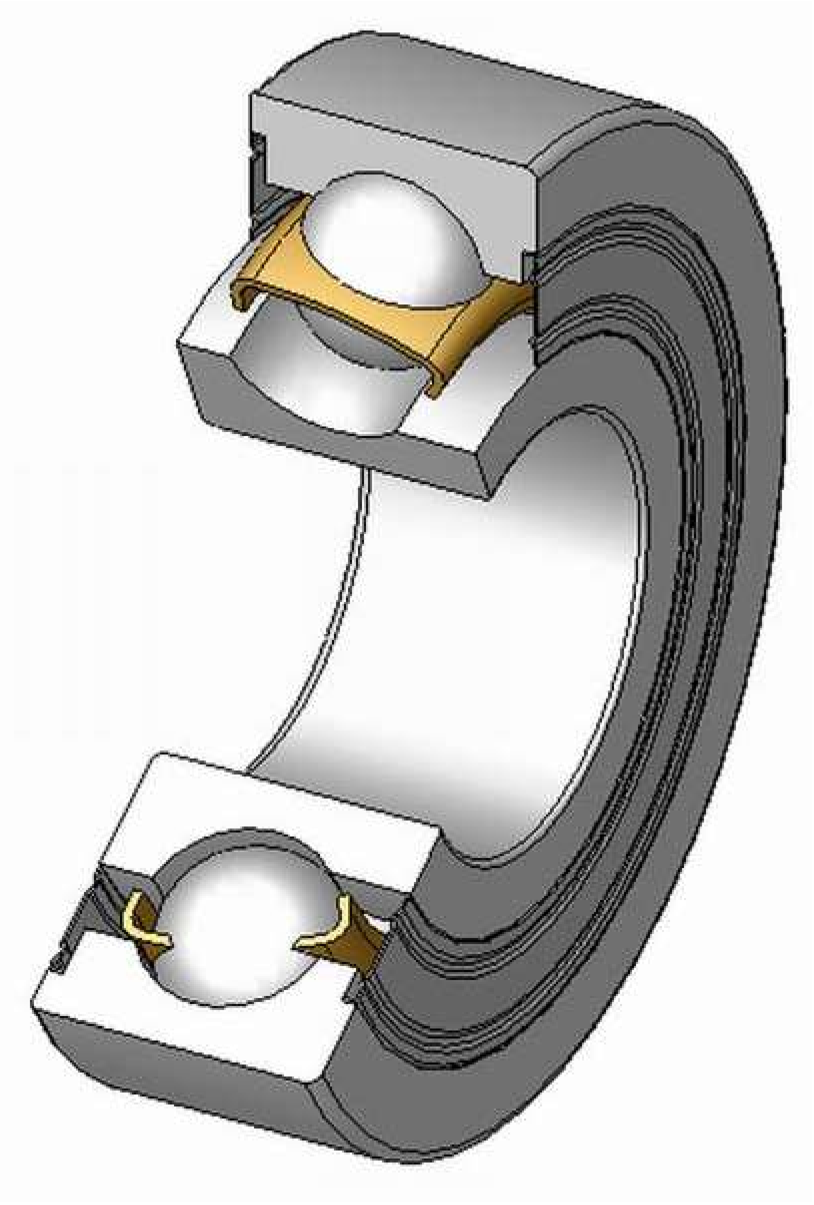

A ball bearing

Ball bearings use balls instead of cylinders. Ball bearings can support both radial (perpendicular to the shaft) and axial loads (parallel to the shaft). For lightly-loaded bearings, balls offer lower friction than rollers. Ball bearings can operate when the bearing races are misaligned. Precision balls are typically cheaper to produce than shapes such as rollers; combined with high-volume use, ball bearings are often much cheaper than other bearings of similar dimensions. Ball bearings may have high point loads, limiting total load capacity compared to other bearings of similar dimensions.

Cylindrical roller

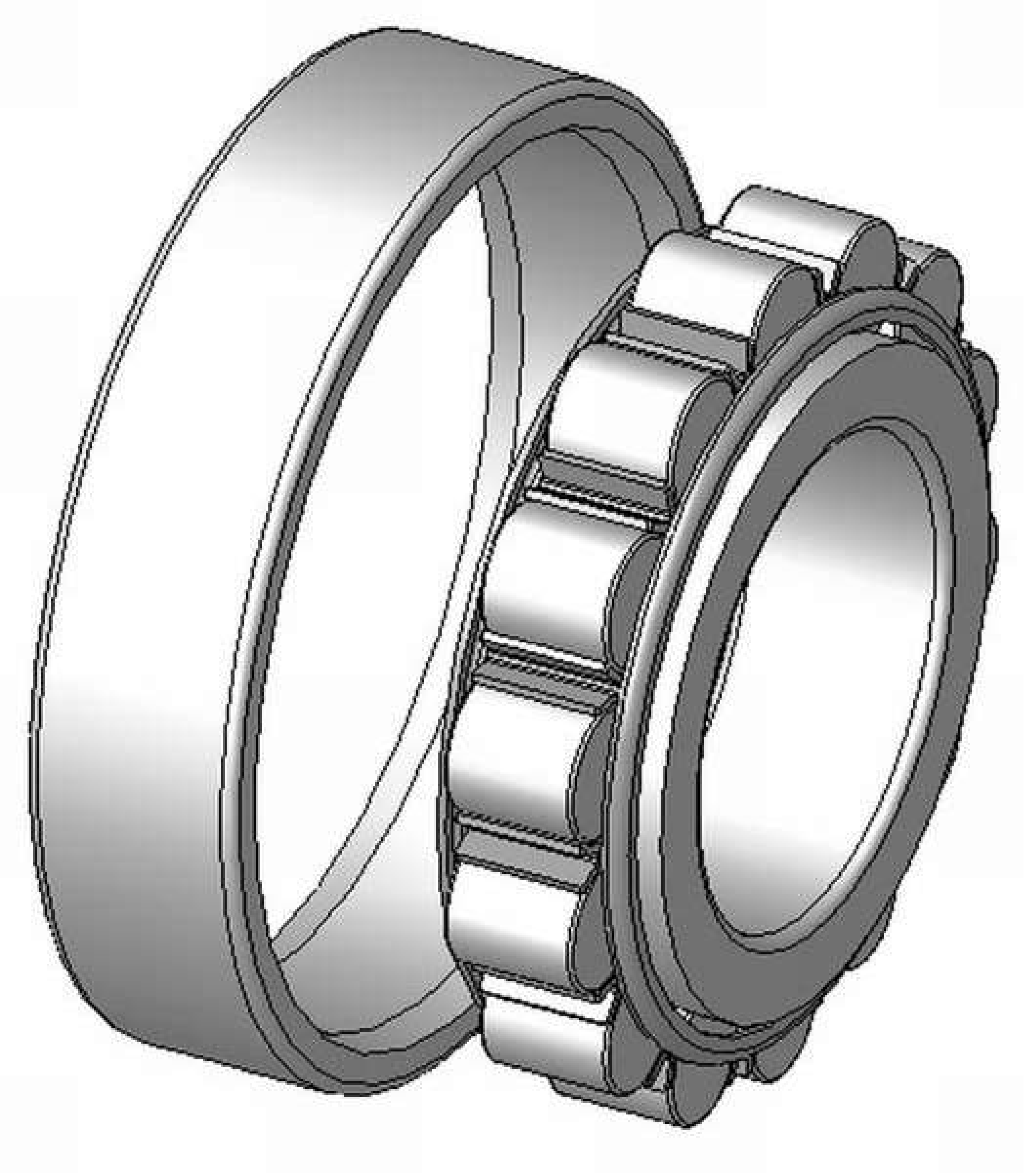

A roller bearing

Common roller bearings use cylinders of slightly greater length than diameter. Roller bearings typically have higher load capacity than ball bearings, but a lower capacity and higher friction under loads perpendicular to the primary supported direction. If the inner and outer races are misaligned, the bearing capacity often drops quickly compared to either a ball bearing or a spherical roller bearing.

Roller bearings are the earliest known type of rolling-element-bearing, dating back to at least 40 BC.

Needle

A needle roller bearing

Needle roller bearings use very long and thin cylinders. Often the ends of the rollers taper to points, and these are used to keep the rollers captive, or they may be hemispherical and not captive but held by the shaft itself or a similar arrangement. Since the rollers are thin, the outside diameter of the bearing is only slightly larger than the hole in the middle. However, the small-diameter rollers must bend sharply where they contact the races, and thus the bearing fatigues relatively quickly.

Tapered roller

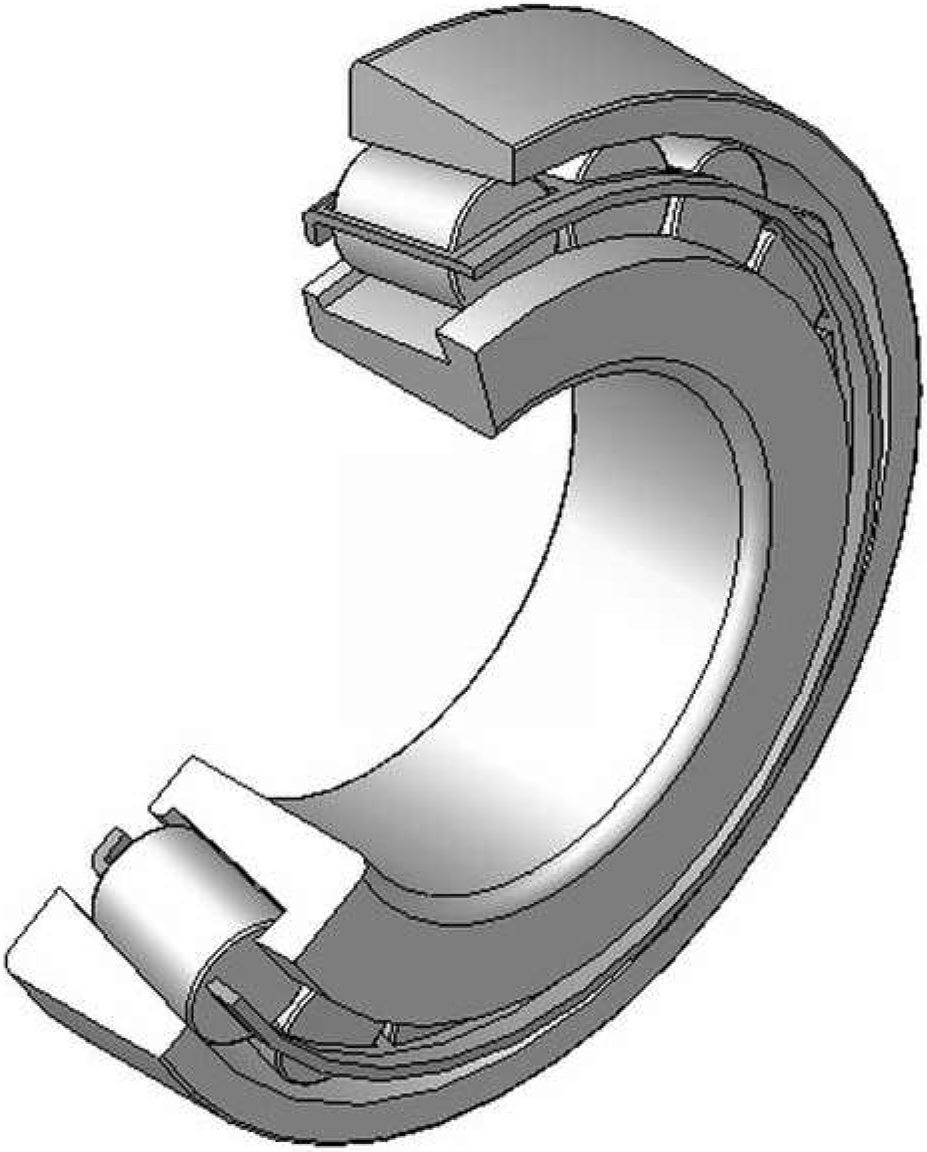

Tapered roller bearings

Tapered roller bearings use conical rollers that run on conical races. Most roller bearings only take radial or axial loads, but tapered roller bearings support both radial and axial loads, and generally can carry higher loads than ball bearings due to greater contact area. Taper roller bearings are used, for example, as the wheel bearings of most cars, trucks, buses, and so on. The downsides to this bearing is that due to manufacturing complexities, tapered roller bearings are usually more expensive than ball bearings; and additionally under heavy loads the tapered roller is like a wedge and bearing loads tend to try to eject the roller; the force from the collar which keeps the roller in the bearing adds to bearing friction compared to ball bearings.

Spherical roller

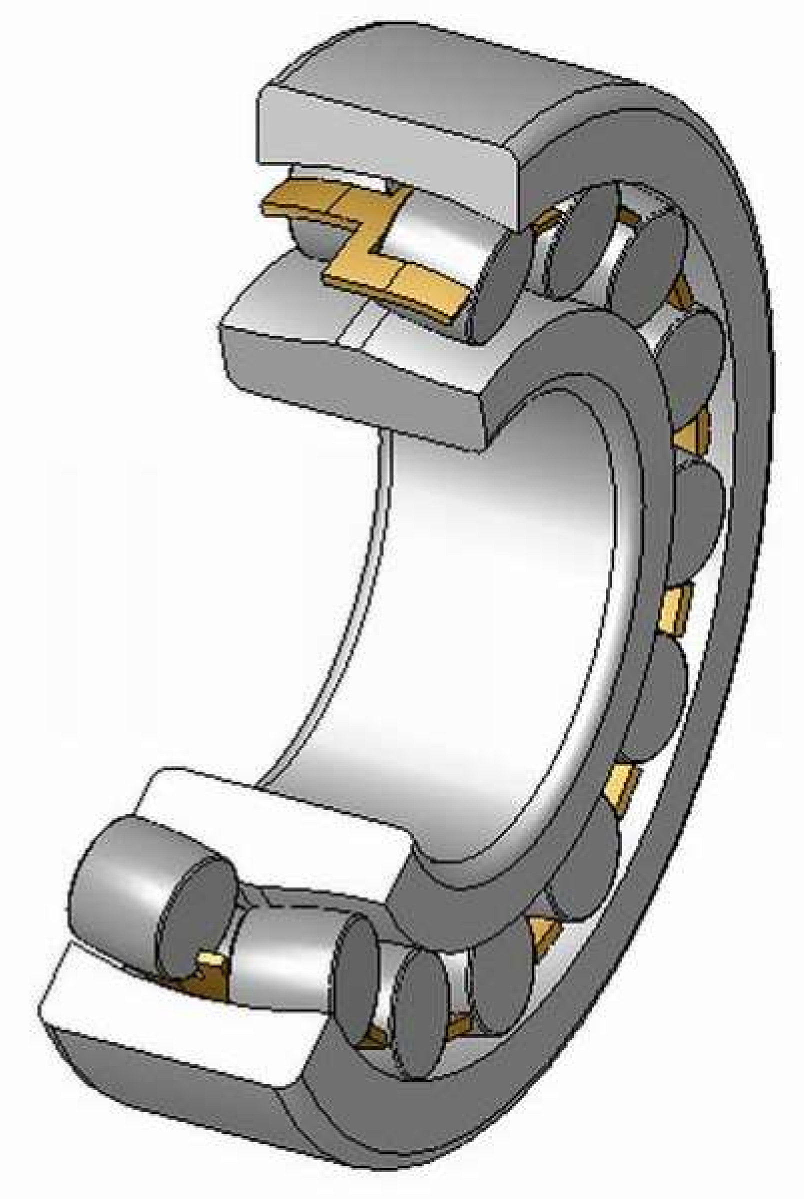

Spherical roller bearings

Spherical roller bearings use rollers that are thicker in the middle and thinner at the ends; the race is shaped to match. Spherical roller bearings can thus adjust to support misaligned loads. However, spherical rollers are difficult to produce and thus expensive, and the bearings have higher friction than a comparable ball bearing since different parts of the spherical rollers run at different speeds on the rounded race and thus there are opposing forces along the bearing/race contact.

Configurations

The configuration of the races determine the types of motions and loads that a bearing can best support. A given configuration can serve multiple of the following types of loading.

Thrust loadings

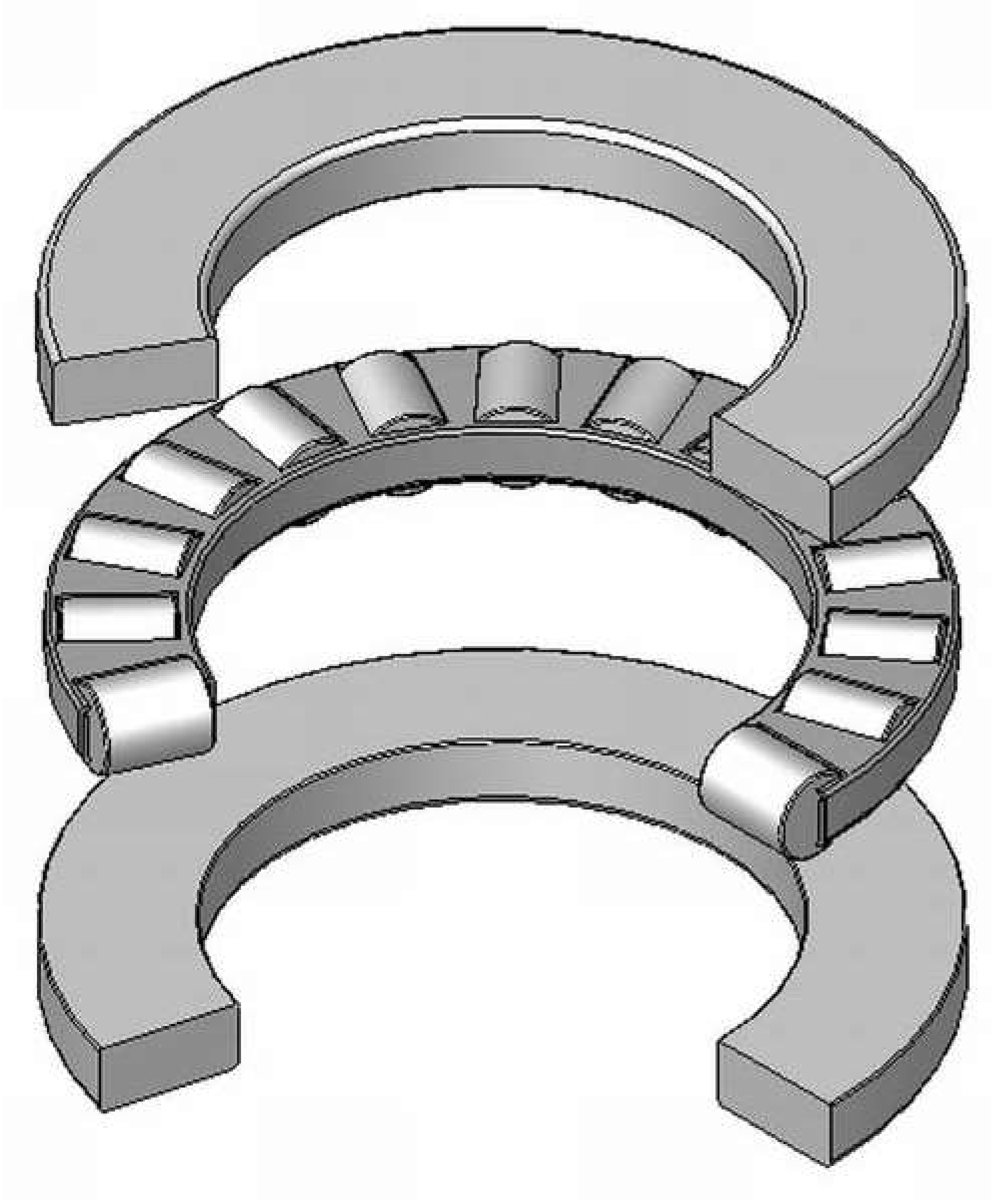

A thrust roller bearing

Thrust bearings are used to support axial loads, such as vertical shafts. Commonly spherical, conical or cylindrical rollers are used; but non-rolling element bearings such as hydrostatic or magnetic bearings see some use where particularly heavy loads or low friction is needed.

Radial loadings

Rolling element bearings are often used for axles due to their low rolling friction. For light loads, such as bicycles, ball bearings are often used. For heavy loads and where the loads can greatly change during cornering, such as cars and trucks, tapered rolling bearings are used.

Linear motion

Linear motion roller-element bearings are typically designed for either shafts or flat surfaces. Flat surface bearings often consist of rollers and are mounted in a cage, which is then placed between the two flat surfaces; a common example is drawer-support hardware. Roller-element bearing for a shaft use bearing balls in a groove designed to recirculate them from one end to the other as the bearing moves; as such, they are called *linear ball bearings* or *recirculating bearings*.

Bearing failure

A prematurely failed rear bearing cone from a mountain bicycle, caused by a combination of pitting due to wet conditions, improper lubrication, and fatigue from frequent shock loading.

Rolling-element bearings often work well in non-ideal conditions, but sometimes minor problems cause bearings to fail quickly and mysteriously. For example, with a stationary (non-rotating) load, small vibrations can gradually press out the lubricant between the races and rollers or balls (false brinelling). Without lubricant the bearing fails, even though it is not rotating and thus is apparently not being used. For these sorts of reasons, much of bearing design is about failure analysis.

There are three usual limits to the lifetime or load capacity of a bearing: abrasion, fatigue and pressure-induced welding. Abrasion is when the surface is eroded by hard contaminants scraping at the bearing materials. Fatigue is when a material breaks after it is repeatedly loaded and released. Where the ball or roller touches the race there is always some deformation, and hence a risk of fatigue. Smaller balls or rollers deform more sharply, and so tend to fatigue faster. Pressure-induced welding is when two metal pieces are pressed together at very high pressure and they become one. Although balls, rollers and races may look smooth, they are microscopically rough. Thus, there are high-pressure spots which push away the bearing lubricant. Sometimes, the resulting metal-to-metal contact welds a microscopic part of the ball or roller to the race. As the bearing continues to rotate, the weld is then torn apart, but it may leave race welded to bearing or bearing welded to race.

Although there are many other apparent causes of bearing failure, most can be reduced to these three. For example, a bearing which is run dry of lubricant fails not because it is "without lubricant", but because lack of lubrication leads to fatigue and welding, and the resulting wear debris can cause abrasion. Similar events occur in false brinelling damage. In high speed applications, the oil flow also reduces the bearing metal temperature by convection. The oil becomes the heat sink for the friction losses generated by the bearing.

Constraints and trade-offs

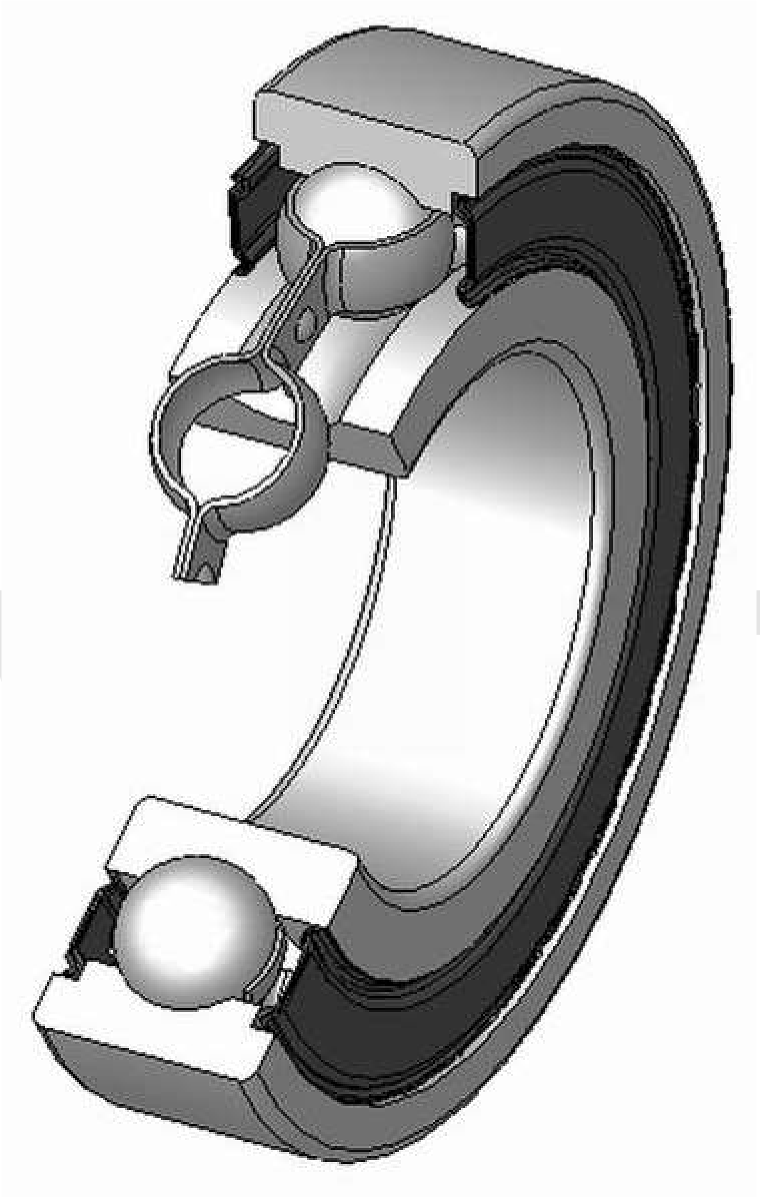

Caged radial ball bearings

All parts of a bearing are subject to many design constraints. For example, the inner and outer races are often complex shapes, making them difficult to manufacture. Balls and rollers, though simpler in shape, are small; since they bend sharply where they run on the races, the bearings are prone to fatigue. The loads within a bearing assembly are also affected by the speed of operation: rolling-element bearings may spin over 100,000 rpm, and the principal load in such a bearing may be momentum rather than the applied load. Smaller rolling elements are lighter and thus have less momentum, but smaller elements also bend more sharply where they contact the race, causing them to fail more rapidly from fatigue. Maximum rolling element bearing speeds are often specified in 'DN', which is the product of the diameter (in mm) and the maximum RPM. For angular contact bearings DNs over 2.1 million have been found to be reliable in high performance rocketry applications.

There are also many material issues: a harder material may be more durable against abrasion but more likely to suffer fatigue fracture, so the material varies with the application, and while steel is most common for rolling-element bearings, plastics, glass, and ceramics are all in common use. A small defect (irregularity) in the material is often responsible for bearing failure; one of the biggest improvements in the life of common bearings during the second half of the 20th century was the use of more homogeneous materials, rather than better materials or lubricants (though both were also significant). Lubricant properties vary with temperature and load, so the best lubricant varies with application.

Although bearings tend to wear out with use, designers can make tradeoffs of bearing size and cost versus lifetime. A bearing can last indefinitely—longer than the rest of the machine—if it is kept cool, clean, lubricated, is run within the rated load, and if the bearing materials are sufficiently free of microscopic defects. Note that cooling, lubrication, and sealing are thus important parts of the bearing design.

The needed bearing lifetime also varies with the application. For example, Tedric A. Harris reports in his *Rolling Bearing Analysis* on an oxygen pump bearing in the U.S. Space Shuttle which could not be adequately isolated from the liquid oxygen being pumped. All lubricants reacted with the oxygen, leading to fires and other failures. The solution was to lubricate the bearing with the oxygen. Although liquid oxygen is a poor lubricant, it was adequate, since the service life of the pump was just a few hours.

The operating environment and service needs are also important design considerations. Some bearing assemblies require routine addition of lubricants, while others are factory sealed, requiring no further maintenance for the life of the mechanical assembly. Although seals are appealing, they increase friction, and in a permanently-sealed bearing the lubricant may become contaminated by hard particles, such as steel chips from the race or bearing, sand, or grit that gets past the seal. Contamination in the lubricant is abrasive and greatly reduces the operating life of the bearing assembly. Another major cause of bearing failure is the presence of water in the lubrication oil. Online water-in-oil monitors have been introduced in recent years to monitor the effects of both particles and the presence of water in oil and their combined effect.

Chapter 4

Jewel Bearing and Flexure Bearing

Jewel bearing

Ruby jewel bearings used for a balance wheel in a mechanical watch movement.

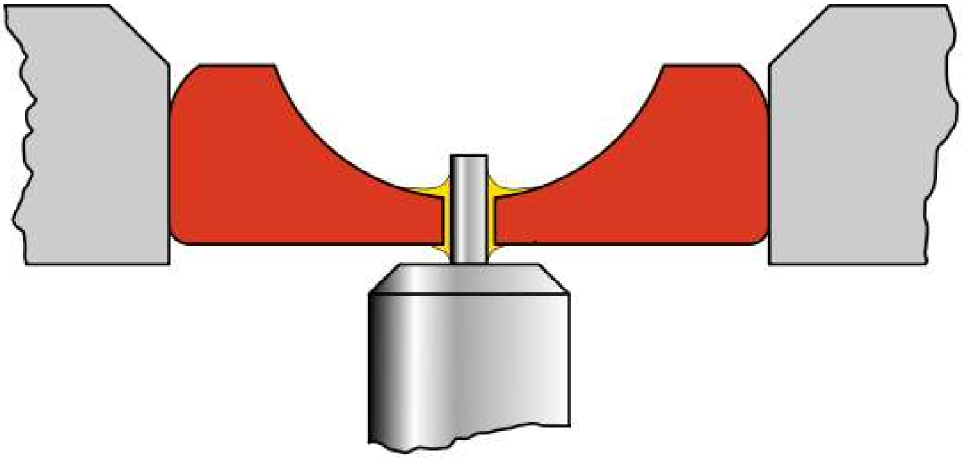

Cross section of a jewel bearing in a mechanical watch. This type of donut-shaped bearing (red) is called a *hole jewel*, used for most of the ordinary wheels in the gear train and usually made of synthetic sapphire (ruby). It is press-fitted into a hole in the movement's supporting plate (grey). The cup-shaped depression in the top of the jewel is the oil cup; its purpose is to hold the lubricating oil (yellow) in contact with the bearing shaft by capillary action.

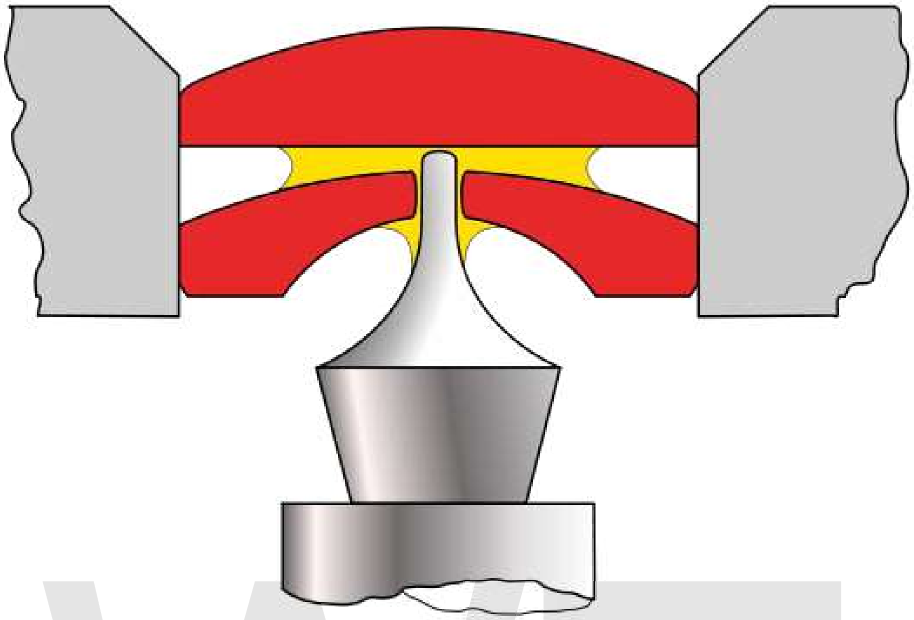

In wheels where friction is critical, a *capstone* is added on the end to prevent the shoulder of the shaft from bearing against the face of the jewel.

A **jewel bearing** is a plain bearing in which a metal spindle turns in a jewel-lined pivot hole. The hole is typically shaped like a torus and is slightly larger than the shaft diameter. The jewel material is usually synthetic sapphire. Jewel bearings are used in precision instruments, but their largest use is in mechanical watches.

History

Jewel bearings were invented in 1704 for use in watches by Nicolas Fatio de Duillier, Peter Debaufre, and Jacob Debaufre, who received an English patent for the idea. Originally natural jewels were used, such as diamond, sapphire, ruby, and garnet. In 1902, a process to make synthetic sapphire and ruby (crystalline aluminum oxide, also known as corundum) was invented by Auguste Verneuil, making jewelled bearings much less expensive. Today most jewelled bearings are synthetic ruby or sapphire.

Historically, jewel pivots were made by grinding using diamond abrasive. Modern jewel pivots are often made using high-powered lasers, chemical etching, and ultrasonic milling.

Characteristics

The advantages of jewel bearings include high accuracy, very small size and weight, low and predictable friction, including good temperature stability, and the ability to operate without lubrication and in corrosive environments. They are known for their low static friction and highly consistent dynamic friction. The static coefficient of friction of brass-on-steel is 0.35, while that of sapphire-on-steel is 0.10–0.15. Sapphire surfaces are very hard and durable, with Mohs hardness of 9 and Knoop hardness of 2000, and can maintain smoothness over decades of use, thus reducing friction variability. Disadvantages include brittleness and fragility, limited availability/applicability in medium and large bearing sizes and capacities, and friction variations if the load is not axial.

Uses

The largest use for jewel bearings is in mechanical watches, where their low and predictable friction improves watch accuracy. A typical mark of watch quality was a note such as *17 jewels*. More jewel bearings often meant better precision. Some makers added non-functional or unnecessary jewels to give the impression of accuracy. Some watches had as many as 100 jewels, most of them of no use. A typical *fully jeweled* time-only watch has 17 jewels: two cap jewels, two pivot jewels, an impulse jewel for the balance wheel, two pivot jewels, two pallet jewels for the pallet fork, and two pivot jewels each for the escape, fourth, third, and center wheels. Modern electronic watches achieve accuracy entirely separate from the friction of the mechanism, but early quartz watches used jewels to increase battery life, and high-grade quartz watches use jewels to reduce friction and wear.

Today, jewel bearings are also used widely in sensitive measuring equipment. They are typically used for very small applications, such as high-precision instruments; galvanometers, compasses, gimbals, and turbine flow meters. Bearing bores are typically less than 1 mm and typically support loads of under the weight of 1 gram, although they are made as large as 10 mm and support loads up to about the weight of 500 g.

Flexure bearing

A **flexure bearing** is a bearing which allows motion by bending a load element.

A typical flexure bearing is just one part, joining two other parts. For example, a hinge may be made by attaching a long strip of a flexible element to a door and to the door frame. Another example is a rope swing, where the rope is tied to a tree branch.

A living hinge (a type of flexure bearing), on the lid of a Tic Tac box.

Flexure bearings have the advantage over most other bearings that they are simple and thus inexpensive. They are also often compact, light weight, have very low friction, and are easier to repair without specialized equipment. Flexure bearings have the disadvantages that the range of motion is limited, and often very limited for bearings that support high loads.

A flexure bearing relies on the bearing element being made of a material which can be repeatedly flexed without disintegrating. However, most materials fall apart if flexed a lot. For example, most metals will fatigue with repeated flexing, and will eventually snap. Thus, one part of flexure bearing design is avoiding fatigue. Note, however, that fatigue is important in other bearings. For example, the rollers and races in a rolling-element bearing fatigue as they flatten against each other.

Flexure bearings can give very low friction and also give very predictable friction. Many other bearings rely on sliding or rolling motions, which are necessarily uneven because the bearing surfaces are never perfectly flat. A flexure bearing operates by bending of materials, which causes motion at microscopic level, so friction is very uniform. For this reason, flexure bearings are often used in sensitive precision measuring equipment.

Flexure bearings are not limited to low loads, however. For example, the drive shafts of some sports cars replace cardan universal joints with an equivalent joint called a rag joint which works by bending rubberized fabric. The resulting joint is lighter yet is capable of carrying hundreds of kilowatts, with adequate durability for a sports car.

Many flexure bearings are combined with other elements. For example, many motor vehicles use leaf springs. The spring both holds the position of the axle as the axle moves (flexure bearing) and provides force to support the vehicle (springing). In many cases it is not clear where flexure bearing leaves off and something else takes up. For example, turbines are often supported on flexible shafts so an imperfectly-balanced turbine can find its own center and run with reduced vibration. Seen one way, the flexible shaft includes the function of a flexure bearing; seen another, the shaft is not a "bearing".

Chapter 5

Fluid Bearing

Hydrodynamic bearing demonstration rig.

Fluid bearings are bearings which solely support the bearing's loads on a thin layer of liquid or gas.

They can be broadly classified as **fluid dynamic bearings** or **hydrostatic bearings**. Hydrostatic bearings are externally pressurized fluid bearings, where the fluid is usually oil, water or air, and the pressurization is done by a pump. Hydrodynamic bearings rely on the high speed of the journal self-pressurizing the fluid in a wedge between the faces.

Fluid bearings are frequently used in high load, high speed or high precision applications where ordinary ball bearings have short life or high noise and vibration. They are also used increasingly to reduce cost. For example, hard disk drive motor fluid bearings are both quieter and cheaper than the ball bearings they replace.

Operation

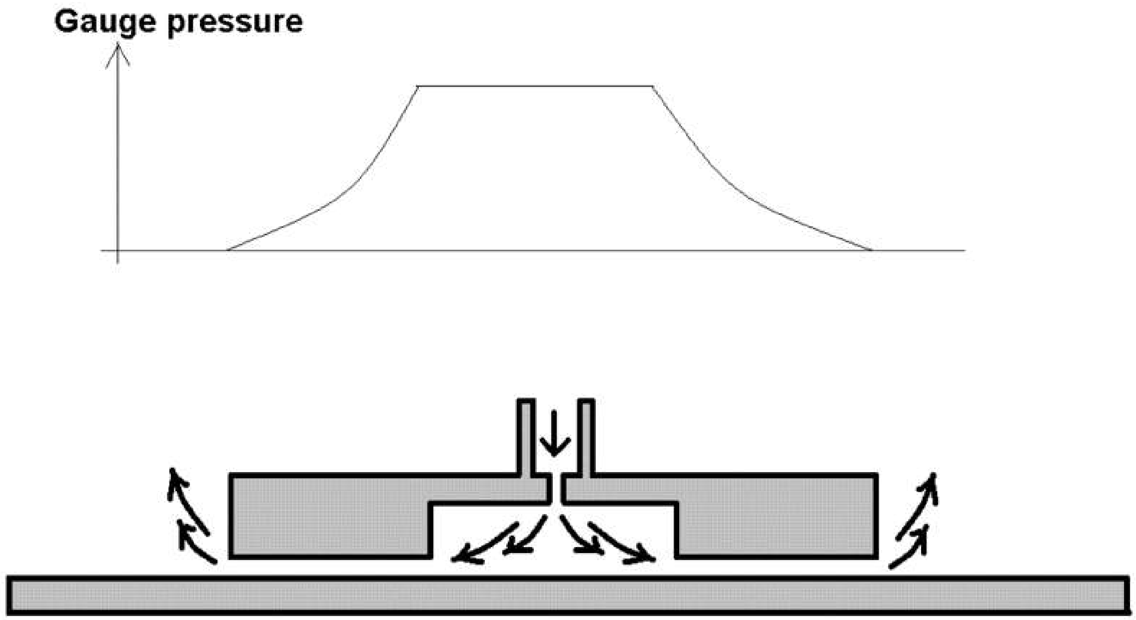

A hydrostatic bearing has two surfaces which has a fluid forced, via a restrictive orifice, in between the surfaces so that it keeps them apart. If the gap between the surfaces reduces then the outflow via the edges of the bearing is reduced and the pressure goes up, forcing the surfaces apart again very strongly, giving excellent control of the gap and giving low friction

Fluid bearings use a thin layer of liquid or gas fluid between the bearing faces, typically sealed around or under the rotating shaft.

There are two principal ways of getting the fluid into the bearing:

- In **fluid static**, **hydrostatic** and many **gas** or **air bearings**, the fluid is pumped in through an orifice or through a porous material.
- In **fluid-dynamic bearings**, the bearing rotation sucks the fluid on to the inner surface of the bearing, forming a lubricating wedge under or around the shaft.

Hydrostatic bearings rely on an external pump. The power required by that pump contributes to system energy loss just as bearing friction otherwise would. Better seals can reduce leak rates and pumping power, but may increase friction.

Hydrodynamic bearings rely on bearing motion to suck fluid into the bearing and may have high friction and short life at speeds lower than design or during starts and stops. An external pump or secondary bearing may be used for startup and shutdown to prevent damage to the hydrodynamic bearing. A secondary bearing may have high friction and short operating life, but good overall service life if bearing starts and stops are infrequent.

Hydrodynamic lubrication

Hydrodynamic (HD) *lubrication*, also known as *fluid film lubrication* has essential elements:

1. A lubricant, which must be a viscous fluid.
2. Hydrodynamic flow behavior of fluid between bearing and journal.
3. The surfaces between which the fluid films move must be convergent.

Hydrodynamic (Full Film) Lubrication is obtained when two mating surfaces are completely separated by a cohesive film of lubricant.

The thickness of the film thus exceeds the combined roughness of the surfaces. The coefficient of friction is lower than with boundary-layer lubrication. Hydrodynamic lubrication prevents wear in moving parts, and metal to metal contact is prevented.

Hydrodynamic lubrication requires thin, converging fluid films. These fluids can be liquid or gas, so long as they exhibit viscosity. In computer components, like a hard disk, heads are supported by hydrodynamic lubrication in which the fluid film is the atmosphere.

The scale of these films are on the order of micrometers. Their convergence creates pressures normal to the surfaces they contact, forcing them apart.

3 Types of bearings include:

- Self-acting: Film exists due to relative motion.
- Squeeze film: Film exists due to relative normal motion.
- Externally pressurized: Film exists due to external pressurization.

Conceptually the bearings can be thought of as two major geometric classes: bearing-journal(Anti Friction), and plane-slider(Friction).

The Reynolds equations can be used to derive the governing principles for the fluids. Note that when gases are used, their derivation is much more involved.

The thin films can be thought to have pressure and viscous forces acting on them. Because there is a difference in velocity there will be a difference in the surface traction vectors. Because of mass conservation we can also assume an increase in pressure, making the body forces different.

Characteristics and principles of operation

Fluid bearings can be relatively cheap compared to other bearings with a similar load rating. The bearing can be as simple as two smooth surfaces with seals to keep in the working fluid. In contrast, a conventional rolling-element bearing may require many high-precision rollers with complicated shapes. Hydrostatic and many gas bearings do have the complication and expense of external pumps.

Most fluid bearings require little or no maintenance, and have almost unlimited life. Conventional rolling-element bearings usually have shorter life and require regular maintenance. Pumped hydrostatic and aerostatic (gas) bearing designs retain low friction down to zero speed and need not suffer start/stop wear, provided the pump does not fail.

Fluid bearings generally have very low friction—far better than mechanical bearings. One source of friction in a fluid bearing is the viscosity of the fluid. Hydrostatic gas bearings are among the lowest friction bearings. However, lower fluid viscosity also typically means fluid leaks faster from the bearing surfaces, thus requiring increased power for pumps or seals.

When a roller or ball is heavily loaded, fluid bearings have clearances that change less under load (are "stiffer") than mechanical bearings. It might seem that bearing stiffness, as with maximum design load, would be a simple function of average fluid pressure and the bearing surface area. In practice, when bearing surfaces are pressed together, the fluid outflow is constricted. This significantly increases the pressure of the fluid between the bearing faces. As fluid bearing faces can be comparatively larger than rolling surfaces, even small fluid pressure differences cause large restoring forces, maintaining the gap.

However, in lightly loaded bearings, such as disk drives, the typical ball bearing stiffnesses are ~10^7 MN/m. Comparable fluid bearings have stiffness of ~10^6 MN/m. Because of this, some fluid bearings, particularly hydrostatic bearings, are deliberately designed to pre-load the bearing to increase the stiffness.

Fluid bearings often inherently add significant damping. This helps attenuate resonances at the gyroscopic frequencies of journal bearings (sometimes called conical or rocking modes).

It is very difficult to make a mechanical bearing which is atomically smooth and round; and mechanical bearings deform in high-speed operation due to centripetal force. In contrast, fluid bearings self-correct for minor imperfections.

Fluid bearings are typically quieter and smoother (more consistent friction) than rolling-element bearings. For example, hard disks manufactured with fluid bearings have noise ratings for bearings/motors on the order of 20-24 dB, which is a little more than the background noise of a quiet room. Drives based on rolling-element bearings are typically at least 4 dB noisier.

Tilting pad bearings are used as radial bearings for supporting and locating shafts in compressors.

Disadvantages

Overall power consumption is typically higher compared to ball bearings.

Power consumption and stiffness or damping greatly vary with temperature, which complicates the design and operation of a fluid bearing in wide temperature range situations.

Fluid bearings can catastrophically seize under shock situations. Ball bearings deteriorate more gradually and provide acoustic symptoms.

Like cage frequency vibration in a ball bearing, the half frequency whirl is a bearing instability that generates eccentric precession which can lead to poor performance and reduced life.

Fluid leakage; keeping fluid in the bearing can be a challenge.

Oil fluid bearings are impractical in environments where oil leakage can be destructive or where maintenance is not economical.

Fluid bearing "pads" often have to be used in pairs or triples to avoid the bearing from tilting and losing the fluid from one side.

Some fluid bearings

Foil bearings

Foil bearings are a type of fluid dynamic air bearing that was introduced in high speed turbine applications in the 1960s by Garrett AiResearch. They use a gas as the working fluid, usually air and require no external pressurisation system.

Journal bearings

Pressure-oiled journal bearings appear to be plain bearings but are arguably fluid bearings. For example, journal bearings in gasoline (petrol) and diesel engines pump oil at low pressure into a large-gap area of the bearing. As the bearing rotates, oil is carried into the working part of the bearing, where it is compressed, with oil viscosity preventing the oil's escape. As a result, the bearing hydroplanes on a layer of oil, rather than on metal-on-metal contact as it may appear.

This is an example of a fluid bearing which does not use a secondary bearing for start/stop. In this application, a large part of the bearing wear occurs during start-up and shutdown, though in engine use, substantial wear is also caused by hard combustion contaminants that bridge the oil film.

Air bearings

Unlike contact-roller bearings, air bearings utilize a thin film of pressurized air to provide an exceedingly low friction load-bearing interface between surfaces. The two surfaces don't touch. Being non-contact, air bearings avoid the traditional bearing-related problems of friction, wear, particulates, and lubricant handling, and offer distinct advantages in precision positioning, such as lacking backlash and stiction, as well as in high-speed applications.

The fluid film of the bearing is air that flows through the bearing itself to the bearing surface. The design of the air bearing is such that, although the air constantly escapes from the bearing gap, the pressure between the faces of the bearing is enough to support the working loads.

Examples

Air hockey is a game based on an aerostatic bearing which suspends the puck and player's paddles to provide low friction and thus fast motion. The bearing uses a flat plane with periodic orifices which deliver air just over ambient pressure. The puck and paddles rest on air.

Another example of a fluid bearing is ice skating. Ice skates form a hydrodynamic fluid bearing where the skate and ice are separated by a layer of water caused by entropy.

Michell/Kingsbury tilting-pad fluid bearings

Michell/Kingsbury fluid dynamic tilting-pad bearings were invented independently and almost simultaneously by both British-born Australian, Anthony George Maldon Michell and American tribologist Albert Kingsbury. Michell's patent was granted in 1905, while Kingsbury's first patent attempt was 1907. Kingsbury's patent was eventually granted in 1911 after he demonstrated that he had been working on the concept for many years. As stated by Sydney Walker, a long-time employee of Michell's, the granting of Kingsbury's patent was "a blow which Michell found hard to accept".

The bearing has sectional *shoes*, or *pads* on pivots. When the bearing is in operation, the rotating part of the bearing carries fresh oil in to the pad area through viscous drag. Fluid pressure causes the pad to tilt slightly, creating a narrow constriction between the shoe and the other bearing surface. A wedge of pressurised fluid builds behind this constriction, separating the moving parts. The tilt of the pad adaptively changes with bearing load and speed. Various design details ensure continued replenishment of the oil to avoid overheating and pad damage.

Michell/Kingsbury fluid bearings are used in a wider variety of heavy-duty rotating equipment, including in hydroelectric plants to support turbines and generators weighing hundreds of tons. They are also used in very heavy machinery, such as marine propeller shafts.

The first tilting pad bearing in service was probably that built under A.G.M. Michell's guidance by George Weymoth (Pty) Ltd, for a centrifugal pump at Cohuna on the Murray River, Victoria, Australia, in 1907, just two years after Michell had published and patented his three-dimensional solution to Reynold's equation. By 1913, the great merits of the tilting-pad bearing had been recognised for marine applications. The first English ship to be fitted out with the bearing was the cross-channel steamboat the *Paris*, but many naval vessels were similarly equipped during the First World War. The practical results were spectacular - the troublesome thrust block became dramatically smaller and lighter, significantly more efficient, and remarkably free from maintenance troubles. It was estimated that the Royal Navy saved coal to a value of £500,000 in 1918 alone as a result of fitting Michell's tilting-pad bearings.

According to the ASME, the first Michell/Kingsbury fluid bearing in the USA was installed in the Holtwood Hydroelectric Power Plant (on the Susquehanna River, near Lancaster, Pennsylvania, USA) in 1912. The 2.25-tonne bearing supports a water turbine and electric generator with a rotating mass of about 165 tonnes and water turbine pressure adding another 40 tonnes. The bearing has been in nearly continuous service since 1912, with no parts replaced. The ASME reported it was still in service as of 2000. As of 2002, the manufacturer estimated the bearings at Holtwood should have a maintenance-free life of about 1,300 years.

Chapter 6

Magnetic Bearing

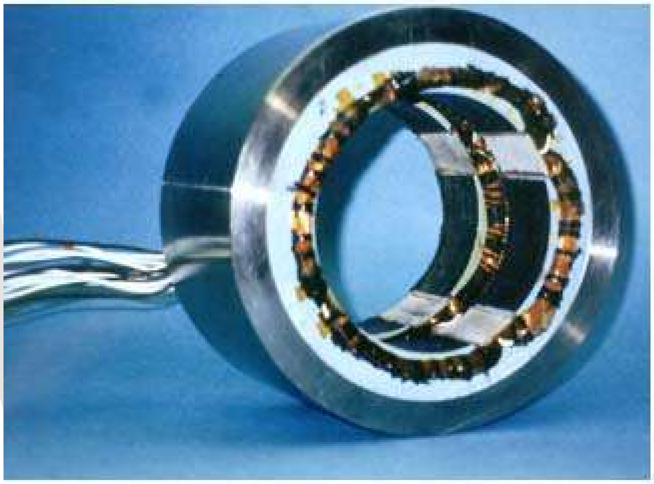

A magnetic bearing

A **magnetic bearing** is a bearing which supports a load using magnetic levitation. Magnetic bearings support moving machinery without physical contact, for example, they can levitate a rotating shaft and permit relative motion with very low friction and no mechanical wear. They are in service in such industrial applications as electric power generation, petroleum refining, machine tool operation and natural gas pipelines. They are also used in the Zippe-type centrifuge used for uranium enrichment. Magnetic bearings are used in turbomolecular pumps where oil-lubricated bearings are a source of contamination. Magnetic bearings support the highest speeds of any kind of bearing; they have no known maximum relative speed.

Description

It is difficult to build a magnetic bearing using permanent magnets due to the limitations described by Earnshaw's theorem, and techniques using diamagnetic materials are relatively undeveloped. As a result, most magnetic bearings require continuous power input and an active control system to hold the load stable. Many bearings can use permanent magnets to carry the static load, and then only use power when the levitated object deviates from its optimum position. Magnetic bearings also typically require some kind of back-up bearing in case of power or control system failure and during initial start-up conditions.

Two sorts of instabilities are very typically present with magnetic bearings. Firstly attractive magnets give an unstable static force, decreasing with greater distance, and increasing at close distances. Secondly since magnetism is a conservative force, in and of itself it gives little if any damping, and oscillations may cause loss of successful suspension if any driving forces are present, which they very typically are.

With the use of an induction-based levitation system present in maglev technologies such as the Inductrack system, magnetic bearings could do away with complex control systems by using Halbach Arrays and simple closed loop coils. These systems gain in simplicity, but are less advantageous when it comes to eddy current losses. For rotating systems it is possible to use homopolar magnet designs instead of multipole halbach structures, which reduces losses considerably. An example of this - that has solved the Earnshaws theorem - is the homopolar electrodynamic bearings invented by Dr Torbjörn Lembke.

Active magnetic bearing

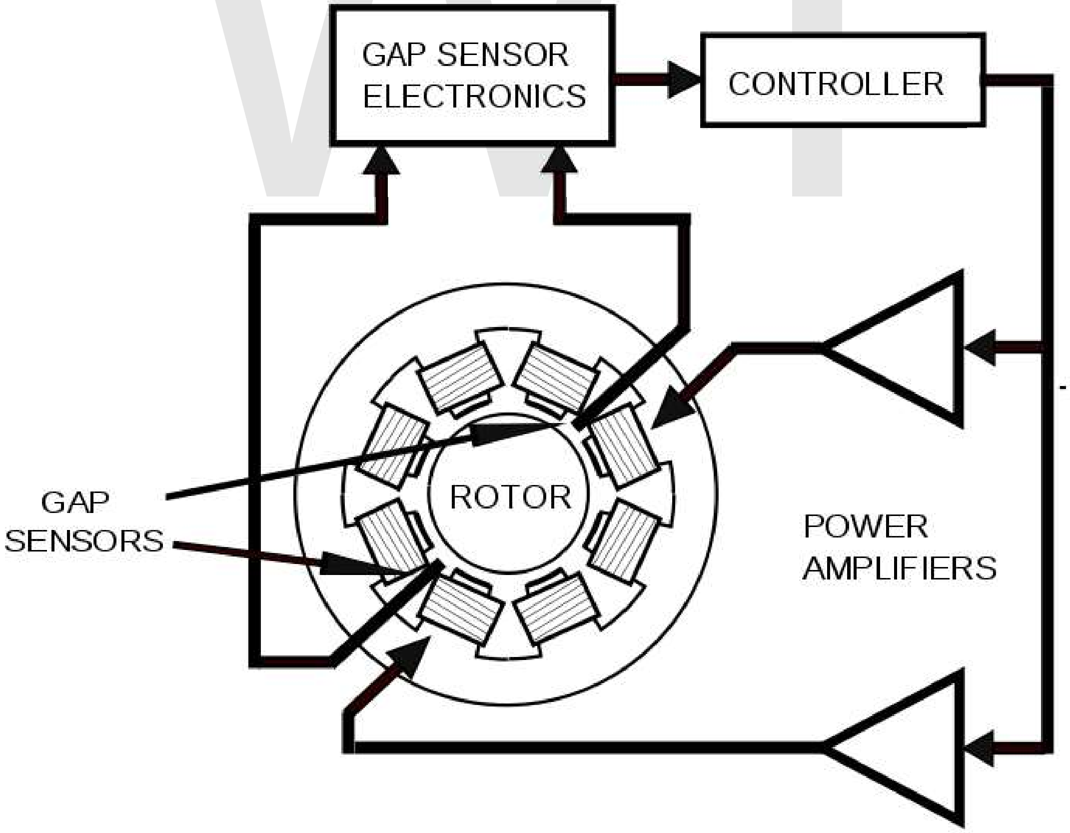

Basic operation for a single axis

An active magnetic bearing (AMB) works on the principle of electromagnetic suspension and consists of an electromagnet assembly, a set of power amplifiers which supply current to the electromagnets, a controller, and gap sensors with associated electronics to provide the feedback required to control the position of the rotor within the gap. These elements are shown in the diagram. The power amplifiers supply equal bias current to two pairs of electromagnets on opposite sides of a rotor. This constant tug-of-war is mediated by the controller which offsets the bias current by equal but opposite perturbations of current as the rotor deviates by a small amount from its center position.

The gap sensors are usually inductive in nature and sense in a differential mode. The power amplifiers in a modern commercial application are solid state devices which operate in a pulse width modulation (PWM) configuration. The controller is usually a microprocessor or DSP.

Active bearings have several advantages, they do not suffer from wear, they have low friction, and they can often accommodate irregularities in the mass distribution automatically, allowing it to spin around its centre of mass with very low vibration.

History

The evolution of active magnetic bearings may be traced through the patents issued in this field. The table below lists several early patents for active magnetic bearings. Earlier patents for magnetic suspensions can be found but are excluded here because they consist of assemblies of permanent magnets of problematic stability per Earnshaw's Theorem.

Early active magnetic bearing patents were assigned to Jesse Beams at the University of Virginia during World War II and are concerned with ultracentrifuges for purification of the isotopes of various elements for the manufacture of the first nuclear bombs, but the technology did not mature until the advances of solid-state electronics and modern computer-based control technology with the work of Habermann and Schweitzer. Extensive modern work in magnetic bearings has continued at the University of Virginia in the Rotating Machinery and Controls Industrial Research Program. The first international symposium for active magnetic bearing technology was held in 1988 with the founding of the International Society of Magnetic Bearings by Prof. Schweitzer (ETHZ), Prof. Allaire (University of Virginia), and Prof. Okada (Ibaraki University).

In 1987 further improved AMB designs were created in Australia by E.Croot but these designs were not manufactured due to expensive costs of production. However, some of those designs have since been used by Japanese electronics companies, they remain a specialty item: where extremely high RPM is required.

Since then there have been nine succeeding symposia. Kasarda reviews the history of AMB in depth. She notes that the first commercial application of AMB’s was with turbomachinery. The AMB allowed the elimination of oil reservoirs on compressors for the NOVA Gas Transmission Ltd. (NGTL) gas pipelines in Alberta, Canada. This reduced the fire hazard allowing a substantial reduction in insurance costs. The success of these magnetic bearing installations led NGTL to pioneer the research and development of a digital magnetic bearing control system as a replacement for the analog control systems supplied by the American company Magnetic Bearings Inc. (MBI). In 1992, NGTL's magnetic bearing research group formed the company Revolve Technologies Inc . to commercialize the digital magnetic bearing technology. This firm was later purchased by SKF of Sweden. The French company S2M, founded in 1976, was the first to commercially market AMB’s. Extensive research on magnetic bearings continues at the University of Virginia in the Rotating Machinery and Controls Industrial Research Program .

Starting from 1996 the Dutch oil and gas company NAM installed over a period of 10 years 20 large E-motor driven (with variable speed drive) gas compressors of 23 MW fully equipped with AMB's on both the E-motor and the compressor. These compressors are used in the Groningen gas field to deplete the remaining gas from this large gas field and to increase the field capacity. The motor - compressor design is done by Siemens and the AMB are delivered by Waukesha (owned by Dover). (Originally these bearings were designed by Glacier, this company is later on taken over by Federal Mogul and now part of Waukesha) By using AMB's and a direct drive between motor and compressor (so no the gearbox in between) and applying dry gas seals a full so called dry-dry system (=fully oil free) has been installed. A few of the main advantages by applying AMB's in the driver as well as in the compressor (compared to the traditional configuration with a gearbox, plain bearings and a gasturbine-driver) is a relative simple system with a very wide operating envelope, high efficiencies (particularly at partial load) and also, as done in the Groningen field, to install the full installation outdoors (no large compressor building needed.

Early U.S. Patents in AMB

Inventor(s)	Year	Patent No.	Invention Title
Beams, Holmes	1941	2,256,937	Suspension of Rotatable Bodies
Beams	1954	2,691,306	Magnetically Supported Rotating Bodies
Beams	1962	3,041,482	Apparatus for Rotating Freely Suspended Bodies
Beams	1965	3,196,694	Magnetic Suspension System
Wolf	1967	3,316,032	Poly-Phase Magnetic Suspension Transformer
Lyman	1971	3,565,495	Magnetic Suspension Apparatus
Habermann	1973	3,731,984	Magnetic Bearing Block Device for Supporting a Vertical Shaft Adapted for Rotating at High Speed
Habermann, Loyen, Joli, Aubert	1974	3,787,100	Devices Including Rotating Members Supported by Magnetic Bearings
Habermann, Brunet	1977	4,012,083	Magnetic Bearings
Habermann,	1978	4,114,960	Radial Displacement Detector Device for a

Electrodynamic bearing

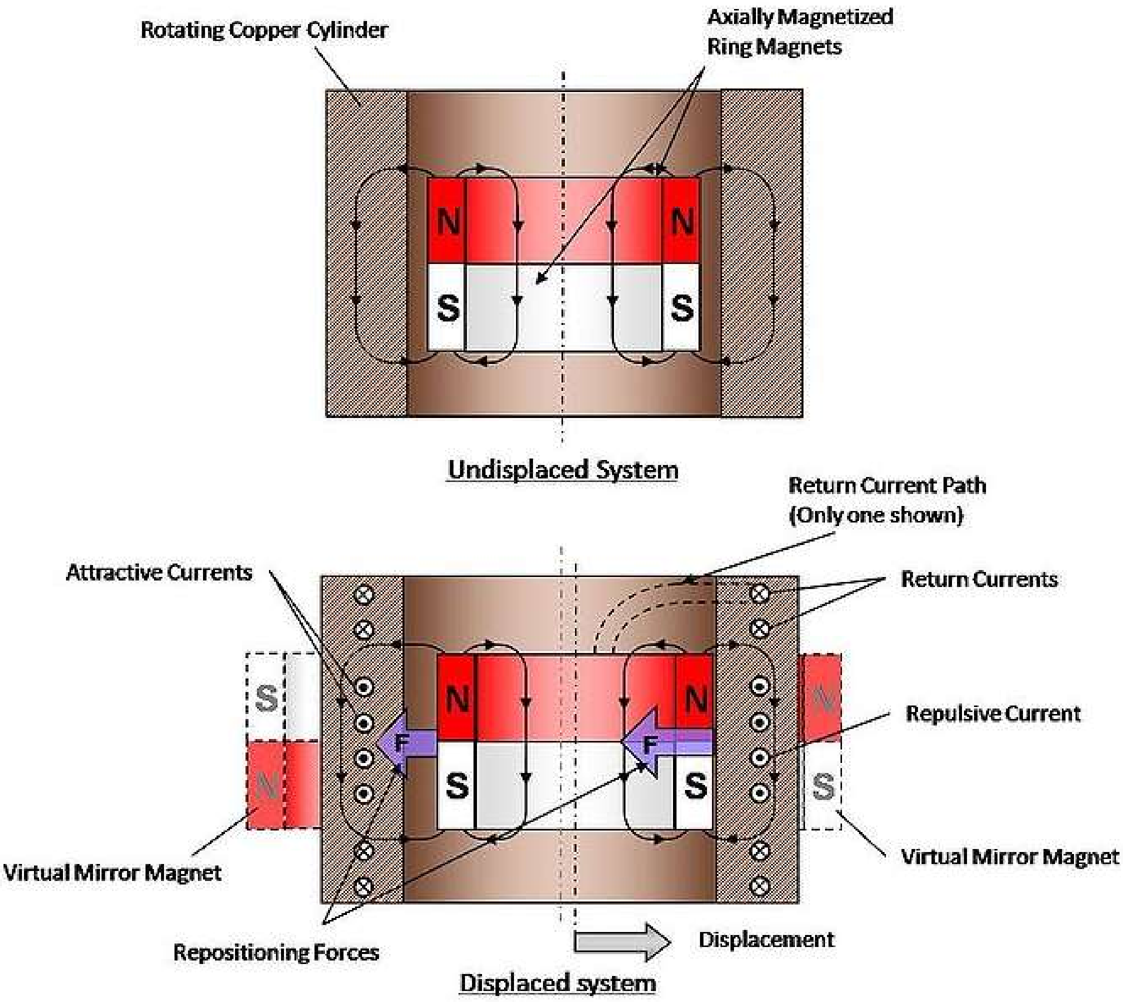

An axial homopolar electrodynamic bearing

Electrodynamic bearings (EDB) are a novel type of bearing that is a passive magnetic technology. EDBs do not require any control electronics to operate. They work by the electrical currents generated by motion causing a restoring force.

Applications

Magnetic bearing advantages include very low and predictable friction, ability to run without lubrication and in a vacuum. Magnetic bearings are increasingly used in industrial machines such as compressors, turbines, pumps, motors and generators. Magnetic bearings are commonly used in watt-hour meters by electric utilities to measure home power consumption. Magnetic bearings are also used in high-precision instruments and to support equipment in a vacuum, for example in flywheel energy storage systems.

A flywheel in a vacuum has very low windage losses, but conventional bearings usually fail quickly in a vacuum due to poor lubrication. Magnetic bearings are also used to support maglev trains in order to get low noise and smooth ride by eliminating physical contact surfaces. Disadvantages include high cost, and relatively large size.

A new application of magnetic bearings is their use in artificial hearts. The use of magnetic suspension in ventricular assist devices was pioneered by Prof. Paul Allaire and Prof. Houston Wood at the University of Virginia culminating in the first magnetically suspended ventricular assist centrifugal pump (VAD) in 1999.

Chapter 7

Electrodynamic Bearing and Foil Bearing

Electrodynamic bearing

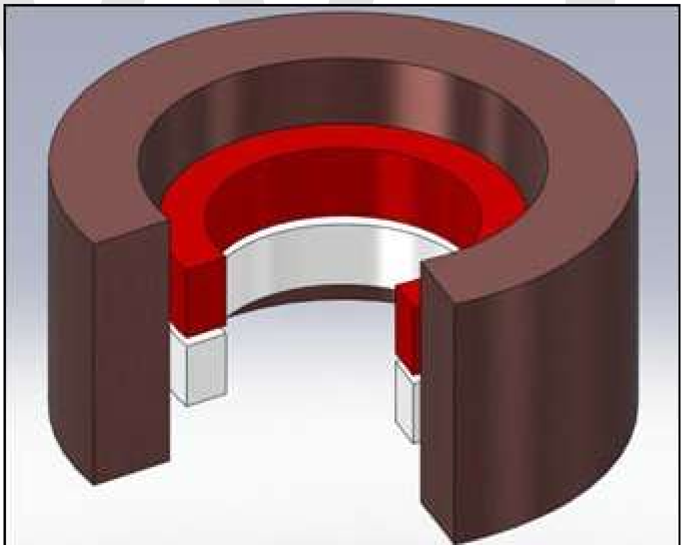

3D-image of an axially magnetized ring magnet surrounded by a copper cylinder. The working principle is shown in a 2D-image below.

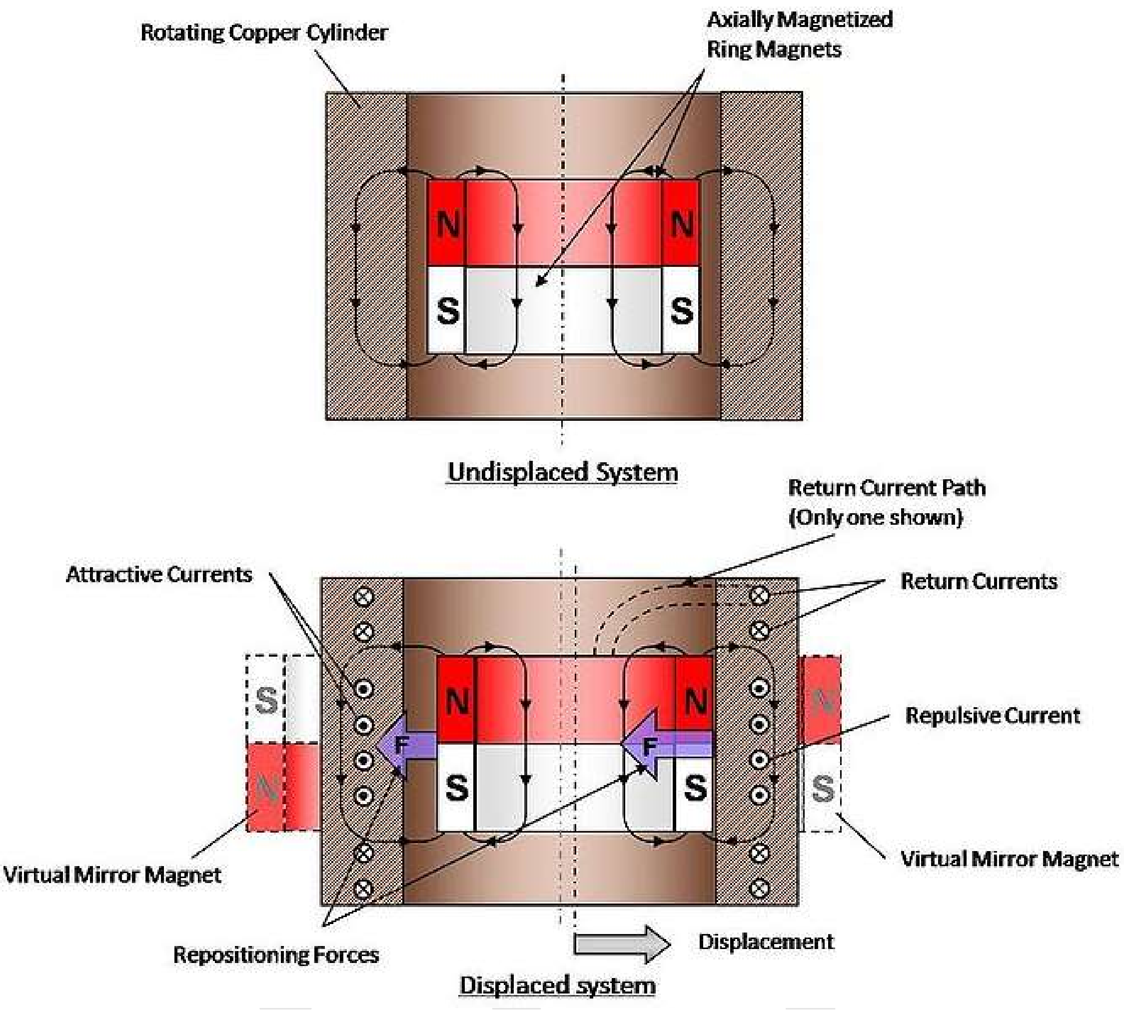

Magnetic mirroring - the working principle for electrodynamic bearing.

Electrodynamic bearings (EDBs) are novel, promising systems that can be used to realize contactless electrodynamic suspension of rotating shafts. Relative to active magnetic bearings (AMB) the passive nature of the levitation achieved by EDBs allows a simpler, more reliable and cheaper solution, opening the field of application to medium and large-scale production.

The working principle is based on the induction of eddy currents in a rotating conductor. When an electrically conducting material is moving in a magnetic field, a current will be generated in the material that counters the change in the magnetic field (known as Lenz' Law). This generates a current that will result in a magnetic field that is oriented opposite to the one from the magnet. The electrically conducting material is thus acting as a magnetic mirror.

Radial magnetic bearing

Avoiding eddy current losses

Before the mid 1990s the eddy currents damping was problematic, but eddy currents and associated power dissipation can be reduced to very low values. The principle of operation is as follows:

A bearing must (1) support a loading force (for example, the weight of a rotor) and (2) provide a force gradient (a restoring force) to hold the rotor in position. Permanent magnets can support weight (in a conventional way, without eddy currents), and without creating destabilizing force gradients, but the Earnshaw theorem precludes achieving stability by this means. Eddy currents can provide a stabilizing *force gradient* without applying a *force* at the operating position (for example, when a shaft is centered). Creating this force *gradient* does not require eddy currents (which are induced in proportion to shaft offset). In practice, eddy currents, and hence resistive losses, can be reduced to small values in normal operation. Dynamic bearings of this class, using permanent magnets and ordinary, resistive conductors, can support load and apply restoring force while dissipating little power (and in principle, none).

An improved design approach for bearings of this class was described and analyzed by Dr. Torbjörn Lembke in his PhD thesis at the Royal Institute of Technology, KTH, in Stockholm, Sweden.

Linear magnetic bearing

Linear dynamic magnetic bearings also exist. For example inductrack which uses halbach arrays and litz wire loops.

Foil bearing

A typical foil-air bearing for the core rotor shaft of an aircraft turbine engine.

Foil or **foil-air bearings** are a type of air bearing. A shaft is supported by a compliant, spring loaded foil journal lining. Once the shaft is spinning quickly enough, the working fluid (usually air) pushes the foil away from the shaft so that there is no more contact. The shaft and foil are separated by the air's high pressure which is generated by the rotation which pulls gas into the bearing via viscosity effects. A high speed of the shaft with respect to the foil is required to initiate the air gap, and once this has been achieved, no wear occurs. Unlike aero or hydrostatic bearings, foil bearings require no external pressurisation system for the working fluid, so the hydrodynamic bearing is self-starting.

Development

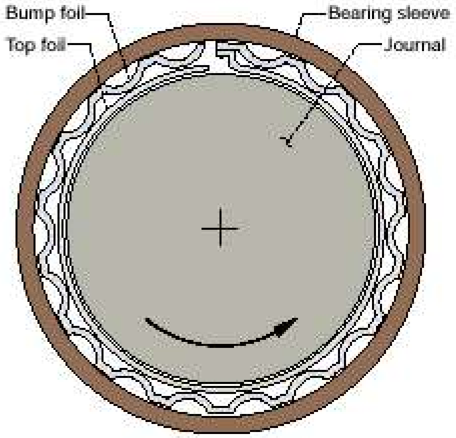

Foil Bearing

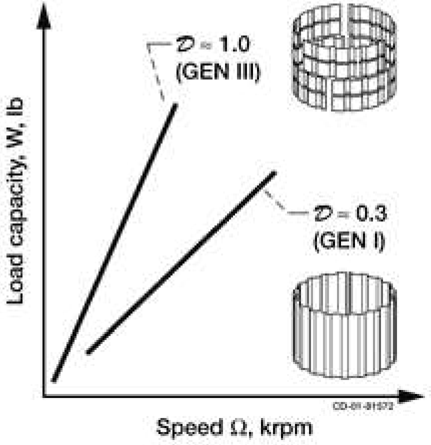

$$W = \mathcal{D}\,(L \times D)\,(D \times \Omega)$$

Where

W is the maximum steady-state load that can be supported, N, lb
$\mathcal{D}$ is the bearing load capacity coefficient, N/(mm^3•krpm) (lb/(in.^{3}•krpm))
L is the bearing axial length, mm, in.
D is the shaft diameter, mm, in.
Ω is the shaft speed in 1000 rpm, krpm

Load capacity against rotation speed, for Gen I and Gen III bearings

Foil bearings were first developed in the late 1950s by AiResearch Mfg. Co. of the Garrett Corporation using independent R&D funds to serve military and space applications. They were first tested for commercial use in United Airlines Boeing 727 and Boeing 737 cooling turbines in the early- and mid-1960s. Garrett AiResearch air cycle machine foil bearings were first installed as original equipment in 1969 in the DC-10's environmental control systems. Garrett AiResearch foil bearings were installed on all U.S. military aircraft to replace existing oil-lubricated rolling-contact bearings. The ability to operate at cryogenic gas temperatures as well as at very high temperatures gave foil bearings many other potential applications.

Current generation foil bearings with advanced coatings have greatly exceeded the limitations of earlier designs. Anti-wear coatings exist that allow over 100,000 start/stop cycles for typical applications. New third generation bearings can hold over 9,000 times their weight, at extremely high speeds.

Applications

Turbomachinery is the most common application because foil bearings operate at high speed. The main advantage of foil bearings is the elimination of the oil systems required by traditional bearing designs. Other advantages are:

- Higher efficiency, due to a lower heat loss to friction; instead of fluid friction, the main source of heat is parasitic drag
- Increased reliability
- Higher speed capability
- Quieter operation
- Wider operating temperature range (40 K to 2500 K)
- High vibration and shock load capacity
- No scheduled maintenance
- No external support system
- Truly oil free where contamination is an issue
- Capable of operating above critical speed

Areas of current research are:

- Higher load capacity
- Improved damping
- Improved coatings

The main disadvantages are:

- Lower capacity than roller or oil bearings
- Wear during start-up and stopping
- High speed required for operation

Chapter 8

Linear-Motion Bearing and Race (Bearing)

Linear-motion bearing

A **linear-motion bearing** or **linear slide** is a bearing designed to provide free motion in one dimension. There are many different types of linear motion bearings and this family of products is generally broken down into two sub-categories: *rolling-element* and *plane*.

Motorized linear slides such as machine slides, XY tables, roller tables and some dovetail slides are bearings moved by drive mechanisms. Not all linear slides are motorized, and non-motorized dovetail slides, ball bearing slides and roller slides provide low-friction linear movement for equipment powered by inertia or by hand. All linear slides provide linear motion based on bearings, whether they are ball bearings, dovetail bearings or linear roller bearings. XY Tables, linear stages, machine slides and other advanced slides use linear motion bearings to provide movement along both X and Y multiple axis.

Rolling-element bearing

A rolling-element bearing is generally composed of a sleeve-like outer ring and several rows of balls retained by cages. The cages were originally machined from solid metal and were quickly replaced by stampings. It features smooth motion, low friction, high rigidity and long life. They are economical, and easy to maintain and replace. Thomson (currently owned by Danaher) is generally given credit for first producing [what is now known as] a linear ball bearing.

- Rolling-element bearings can only run on hardened steel or stainless steel shafting (raceways).
- Rolling-element bearings are more rigid than plane bearings.
- Rolling-element bearings do not handle contamination well and require seals.
- Rolling-element bearings require lubrication.

Rolling-element bearings are manufactured in two forms: ball bearing slides and roller slides.

Ball Bearing Slides

Also called "ball slides", ball bearing slides are the most common type of linear slide. Ball bearing slides offer smooth precision motion along a single-axis linear design, aided by ball bearings housed in the linear base, with self-lubrication properties that increase reliability. Ball bearing slide applications include delicate instrumentation, robotic assembly, cabinetry, high-end appliances and clean room environments, which primarily serve the manufacturing industry but also the furniture, electronics and construction industries. For example, a widely used ball bearing slide in the furniture industry is a ball bearing drawer slide.

Commonly constructed from materials such as aluminum, hardened cold rolled steel and galvanized steel, ball bearing slides consist of two linear rows of ball bearings contained by four rods and located on differing sides of the base, which support the carriage for smooth linear movement along the ball bearings. This low-friction linear movement can be powered by either a drive mechanism, inertia or by hand. Ball bearing slides tend to have a lower load capacity for their size compared to other linear slides because the balls are less resistant to wear and abrasions. In addition, ball bearing slides are limited by the need to fit into housing or drive systems.

Roller Slides

Also known as crossed roller slides, roller slides are non-motorized linear slides that provide low-friction linear movement for equipment powered by inertia or by hand. Roller slides are based on linear roller bearings, which are frequently criss-crossed to provide heavier load capabilities and better movement control. Serving industries such as manufacturing, photonics, medical and telecommunications, roller slides are versatile and can be adjusted to meet numerous applications which typically include clean rooms, vacuum environments, material handling and automation machinery.

Consisting of a stationary linear base and a moving carriage, roller slides work similarly to ball bearing slides, except that the bearings housed within the carriage are cylinder-shaped instead of ball shaped. The rollers crisscross each other at a 90° angle and move between the four semi-flat and parallel rods that surround the rollers. The rollers are between "V" grooved bearing races, one being on the top carriage and the other on the base. The travel of the carriage ends when it meets the end cap, a limiting component. Typically, carriages are constructed from aluminum and the rods and rollers are constructed from steel, while the end caps are constructed from stainless steel.

Although roller slides are not self-cleaning, they are suitable for environments with low levels of airborne contaminants such as dirt and dust. As one of the more expensive types of linear slides, roller slides are capable of providing linear motion on more than one axis through stackable slides and double carriages. Roller slides offers line contact versus point contact as with ball bearings, creating a broader contact surface due to the consistency of contact between the carriage and the base and resulting in less erosion.

Plain bearing

Plain bearings are very similar in design to rolling-element bearings, except they slide without the use of ball bearings.

- Plain bearings can run on hardened steel or stainless steel shafting (raceways), *or* can be run on hard-anodized aluminum or soft steel or aluminum. The specific type of polymer/fluoro-polymer will determine what hardness is allowed.
- Plain bearings are less rigid than rolling-element bearings.
- Plain bearings handle contamination well and often do *not* need seals/scrapers.
- Plain bearings generally handle a wider temperature range than rolling-element bearings
- Plain bearings (plastic versions) do not require oil or lubrication (often it can be used to increase performance characteristics)

Dovetail slides

Dovetail slides, or dovetail way slides are typically constructed from cast iron, but can also be constructed from hard-coat aluminum, acetal or stainless steel. Like any bearing, a dovetail slide is composed of a stationary linear base and a moving carriage. a Dovetail carriage has a v-shaped, or dovetail-shaped protruding channel which locks into the linear base's correspondingly shaped groove. Once the dovetail carriage is fitted into its base's channel, the carriage is locked into the channel's linear axis and allows free linear movement. When a platform is attached to the carriage of a dovetail slide, a dovetail table is created, offering extended load carrying capabilities.

Since dovetail slides have such a large surface contact area, a greater force is required to move the saddle than other linear slides, which results in slower acceleration rates. Additionally, dovetail slides have difficulties with high-friction but are advantageous when it comes to load capacity, affordability and durability. Capable of long travel, dovetail slides are more resistant to shock than other bearings, and they are mostly immune to chemical, dust and dirt contamination. Dovetail slides can be motorized, mechanical or electromechanical. Electric dovetail slides are driven by a number of different devices, such as ball screws, belts and cables, which are powered by functional motors such as stepper motors, linear motors and handwheels. Dovetail slides are direct contact systems, making them fitting for heavy load applications including CNC machines, shuttle devices, special machines and work holding devices. Mainly used in the manufacturing and laboratory science industries, dovetail slides are not ideal for high-precision applications.

Race (bearing)

The rolling-elements of a rolling-element bearing ride on **races**. The large race that goes into a bore is called the *outer race*, and the small race that the shaft rides in is called the *inner race*.

Manufacture

The outer diameter (OD) of the races are often centerless ground using the throughfeed process. Centerless grinding can achieve a very high degree of accuracy, especially when done in stages. These stages are: rough, semi-finish and finish. Each grinding stage is designed to remove enough stock material from the casing so that the next stage does not encounter any problems such as burning or surface chatter, the finish stage achieves the final dimension.

Each grinding wheel at all of the aforementioned stages has a varying degree of abrasive quality (finish being the finest grade) to achieve the appropriate stock removal for the next stage and final surface finish required.

Bearing casings are introduced to the grinding action via means of a transfer from the delivery system to a pair of infeed rollers, these infeed rollers are tapered to a certain angle so that the casings are driven forward until the regulating wheel and grinding wheel catch them and slow them to their grinding speed which can be altered by speed control of the regulating wheel. The casings are constantly rotating and are fed into the grinding area to prevent separation which can cause finish/size problems or even a "bump" that can potentially crack or destroy casings and will damage the grinding and regulating wheels. Whilst grinding, the bearing cases run through the grinding stages in one long tube of casings that is showered with a cutting fluid. The 'tube' rests on a hardened steel blade with an angled, highly ground surface held on a horizontal plane between the grinding wheel and regulating wheel, often named a Work Rest Blade, the tube causes wear on the working surface of the blade so it must be reground at regular intervals. The height of the work rest blade perfectly aligns the bearing casing with the horizontal centreline of the grinding wheel creating a flawless ground finish, the work rest blade height can be altered using packing bars placed underneath the blade, height adjustments must be made depending on the diameter of the casings being ground. Each casing exits the grinding zone onto a high speed conveyor that delivers them to whatever storage and/or inspection arrangement a manufacturer may have, inspection is also carried out by the operator of the centreless line, by checking finish appearance, diameter, squareness and roundness by use of a dial test indicator in varying configurations, size allowances are permitted but are extremely tight depending on the customers requirements and can vary plus or minus within micrometres of finish diameter, Sizes can be adjusted on all grinding stages via a compensation button which can be pushed to remove extra material in varying micrometre units, the grinding wheel can move away at the same compensation to make the casings bigger if so required if the casing size moves from the operators target, and as the grinding wheel wears. Because a centerless grinding line has typically three grinding machines the operator must be in complete control and must prevent blockages in transfers, grinding exits and packing areas, also size and quality must constantly be checked, so the operator is always alert while operating the line and checking for problems and quality issues. Safety features include an emergency stop button which immediately moves the grinding wheel away from the ground rings on its revolutionary axis, because of the wheel's momentum, it cannot be stopped but the power is cut and the wheel slows naturally, it cannot be reactivated until the emergency stop is reset.

Chapter 9

Spherical Bearing and Thrust Bearing

Spherical bearing

A **spherical bearing** is a bearing that permits angular rotation about a central point in two orthogonal directions (usually within a specified angular limit based on the bearing geometry). Typically these bearings support a rotating shaft in the [bore] of the inner ring that must move not only rotationally, but also at an angle.

Construction

Construction of spherical bearings can be hydrostatic or strictly mechanical. A spherical bearing by itself can consist of an outer ring and an inner ring and a locking feature that makes the inner ring captive within the outer ring in the axial direction only. The outer surface of the inner ring and the inner surface of the outer ring are collectively considered the raceway and they slide against each other, either with a lubricant or a maintenance-free polytetrafluoroethylene (PTFE) based liner. Some spherical bearings incorporate a rolling element such as a race of ball-bearings, allowing lower friction.

History

The Swede Sven Wingquist (1876–1953) invented the spherical bearing in 1907. He founded a global company, AB Svenska Kullagerfabriken, still the world’s leading producer of industrial bearings.

Application

Spherical bearings are used in countless applications, wherever rotational motion must be allowed to change the alignment of its rotation axis. A prime example is a tie rod on a vehicle suspension. The mechanics of the suspension allow the axle to move up and down, but the linkages are designed to control that motion in one direction only and they must allow motion in the other directions. Spherical bearings have been used in car suspensions, driveshafts, heavy machinery, sewing machines, and many other applications.

Thrust bearing

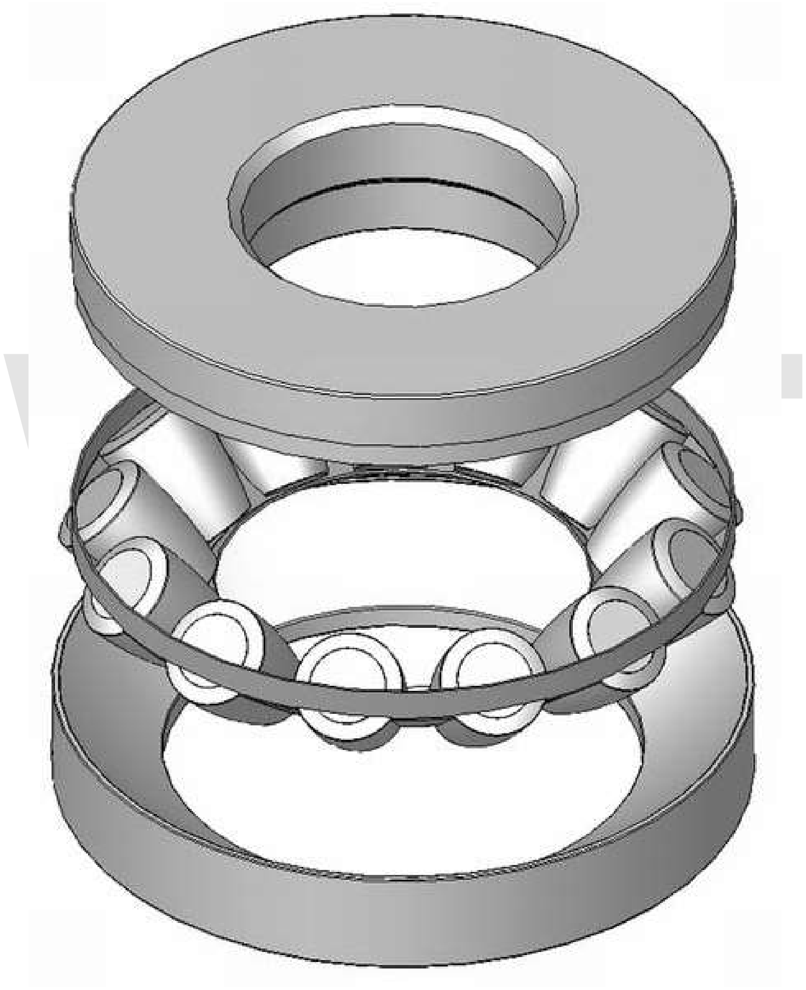

A self-aligning roller thrust bearing

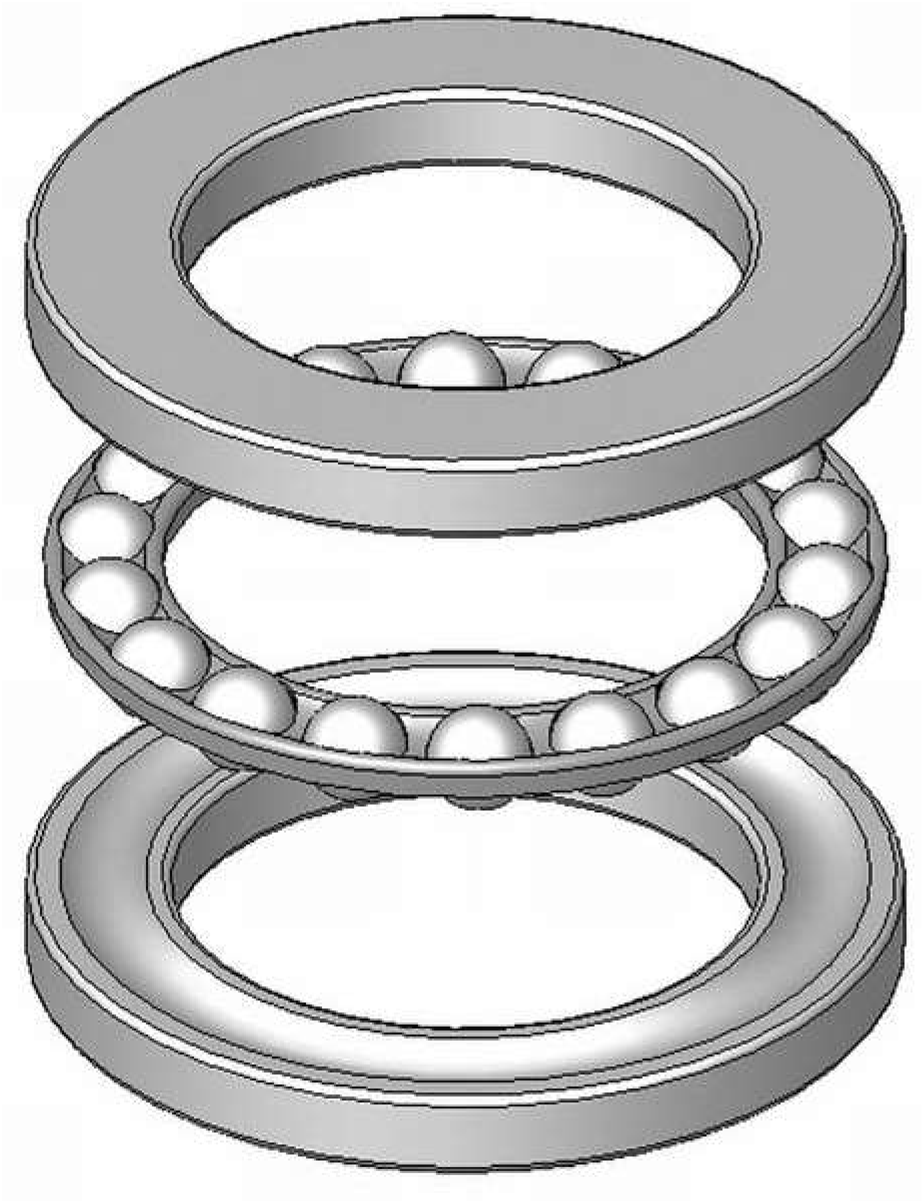

A thrust ball bearing

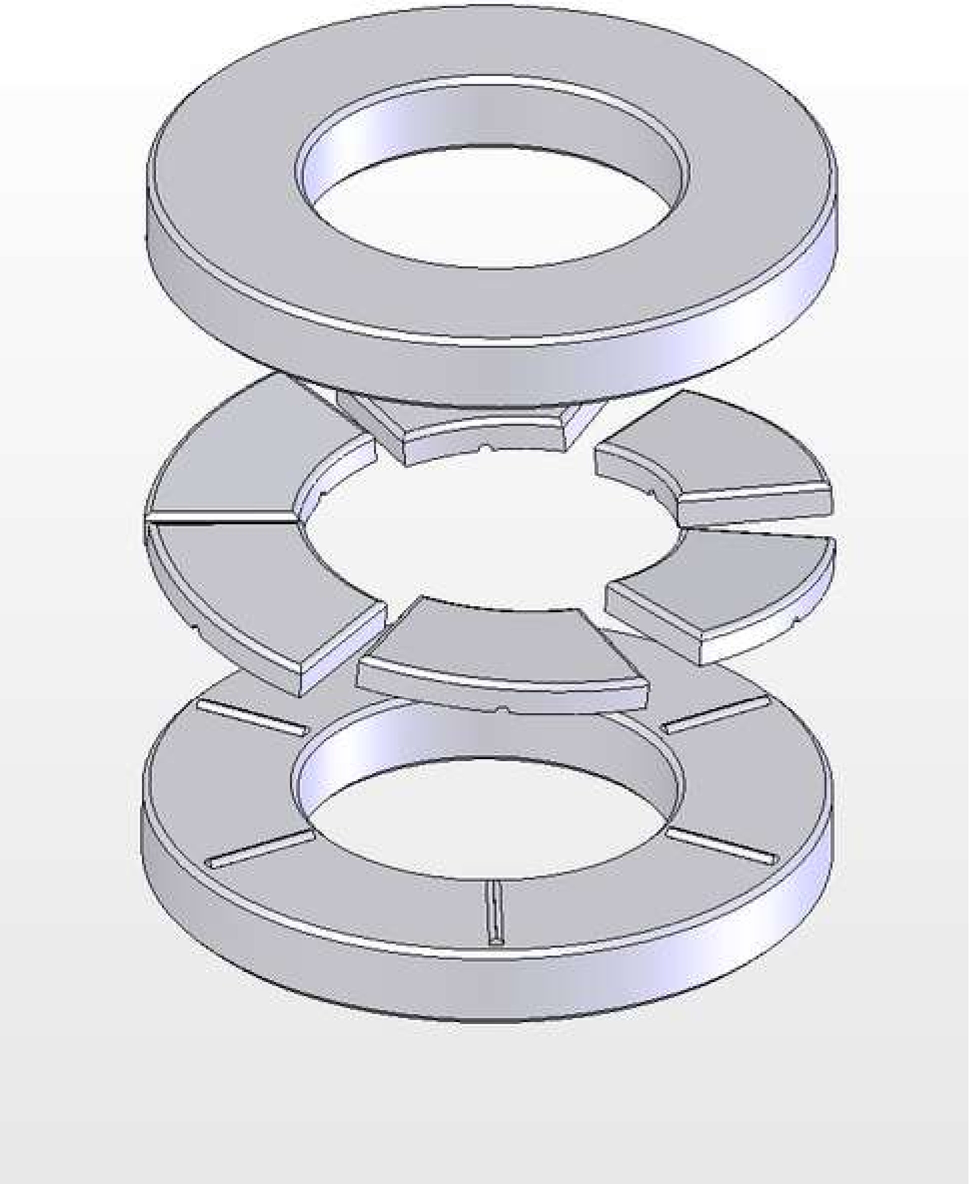

A fluid film thrust bearing

A **thrust bearing** is a particular type of rotary bearing. Like other rotary bearings they permit rotation between parts, but they are designed to support a high axial load while doing this.

Thrust bearings come in several varieties.

- *Ball thrust bearings*, composed of ball bearings supported in a ring, can be used in low thrust applications where there is little radial load.
- *Roller thrust bearing*s consist of small cylindrical rollers arranged flat with their axes pointing to the axis of the bearing. They give very good carrying capacity

and are cheap, but tend to wear due to the differences in radial speed and friction is higher than with ball bearings.

- *Tapered roller bearings* consist of small tapered rollers arranged so that their axes all converge at a point on the axis of the bearing. The length of the roller and the diameter of the wide and the narrow ends and the angle of rollers need to be carefully calculated to provide the correct taper so that each end of the roller rolls smoothly on the bearing face without skidding. These are the type most commonly used in automotive applications (to support the wheels of a motor car for example), where they are used in pairs to accommodate axial thrust in either direction, as well as radial loads. They can support rather larger thrust loads than the ball type due to the larger contact area, but are more expensive to manufacture.
- *Fluid bearings*, where the axial thrust is supported on a thin layer of pressurized liquid—these give low drag.
- *Magnetic bearings*, where the axial thrust is supported on a magnetic field. This is used where very high speeds or very low drag is needed, for example the Zippe-type centrifuge.

They are commonly used in automotive, marine, and aerospace applications.

Thrust bearings are used in cars because the forward gears in modern car gearboxes use helical gears which, while aiding in smoothness and noise reduction, cause axial forces that need to be dealt with. The double helical or herringbone gear balances the thrust caused by normal helical gears.

One specific thrust bearing in an automobile is the clutch "throw out" bearing, sometimes called the *clutch release bearing*.

Fluid-film thrust bearings were invented by Australian engineer George Michell (pronounced Mitchell) who patented his invention in 1905. Michell bearings contain a number of sector-shaped pads, arranged in a circle around the shaft, and which are free to pivot. These create wedge-shaped regions of oil inside the bearing between the pads and a rotating disk, which support the applied thrust and eliminate metal-on-metal contact.

Michell's invention was notably applied to the thrust block in ships. The small size (one-tenth the size of old bearing designs), low friction and long life of Michell's invention made possible the development of more powerful engines and propellers. They were used extensively in ships built during World War I, and have become the standard bearing used on turbine shafts in ships and power plants worldwide.

Thrust ball bearing

Thrust ball bearings consist of two precision chrome steel washers (ring) and a ball complement spaced by bronze retainer. They can be supplied with or without radius ball grooves in the rings. Thrust bearings are used under purely axial loads.

Chapter 10

Ball (Bearing), Ball Joint and Ball Spline

Ball (bearing)

Bearing **balls** are special highly spherical and smooth balls, most commonly used in ball bearings. The balls come in many different *grades*, as defined by the American Bearing Manufacturers Association (ABMA), which defines the precision of the balls. They are manufactured in specially designed machines for the job.

In 2008, the United States produced 5,778 million balls.

Grade

Bearing balls are manufactured to a specific grade, which defines its geometric tolerances. The grades range from 2000 to 3, where the smaller the number the higher the precision. Grades are written "GXXXX", i.e. grade 100 would be "G100". The grades are divided into two categories: *semi-precision* and *precision*. Grades 100 and greater are semi-precision balls and lower than that are precision balls.

The specification defines three parameters: surface integrity, size, and sphericity. The surface integrity refers to surface smoothness, hardness, and lack of defects, such as flats, pits, soft spots, and cuts. The surface smoothness is measured in two ways. surface roughness and waviness.

Size refers to how tight the tolerances are on the size, as measured by two parallel plates in contact with the ball surface. The starting size is the *nominal ball diameter*, which is the nominal, or theoretical, ball diameter. The ball size is then determined by measuring the *ball diameter variation*, which is the difference between the largest and smallest diameter measurement. For a given lot there is a *lot diameter variation*, which is the difference between the mean diameter of the largest ball and the smallest ball of the lot.

Sphericity, or *deviation from spherical form*, refers to how much the ball deviates from a true spherical form (out of roundness). This is measured by rotating a ball against a linear transducer with a gauge force of less than 4 grams (0.14 oz). The resulting polar graph is then circumscribed with the smallest circle possible and the difference between this circumscribed circle and the nominal ball diameter is the variation.

Grade tolerances for inch sizes

Grade	Size range [in]	Sphericity [in]	Lot diameter variation [in]	Nominal ball diameter tolerance [in]	Maximum surface roughness (Ra) [µin]
3	0.006–2	0.000003	0.000003	±0.00003	0.5
5	0.006–6	0.000005	0.000005	±0.00005	0.8
10	0.006–10	0.00001	0.00001	±0.00005	1.0
25	0.006–10	0.000025	0.000025	±0.0001	2.0
50	0.006–10	0.00005	0.00005	±0.0002	3.0
100	0.006–10	0.0001	0.0001	±0.0005	5.0
200	0.006–10	0.0002	0.0002	±0.001	8.0
1000	0.006–10	0.001	0.001	±0.005	

Grade tolerances for metric sizes

Grade	Sphericity [mm]	Lot diameter variation [mm]	Nominal ball diameter tolerance [mm]	Maximum surface roughness (Ra) [mm]
3	0.00008	0.00008	±0.0008	0.012
5	0.00013	0.00013	±0.0013	0.02
10	0.00025	0.00025	±0.0013	0.025
25	0.0006	0.0006	±0.0025	0.051
50	0.0012	0.0012	±0.0051	0.076
100	0.0025	0.0025	±0.0381	0.127
200	0.005	0.005	±0.025	0.203
1000	0.025	0.025	±0.127	

Manufacture

The manufacture of bearing balls depends on the type of material the balls are being made from.

Metal

Metal balls start as a wire. The wire is sheared to give a pellet with a length approximately the size of the desired ball outer diameter (OD). This pellet is then headed into a rough spherical shape. Next, the balls are then fed into a machine that de-flashes them. The machine does this by feeding the balls between two heavy cast iron or hardened steel plates, called *rill plates*. One of the plates is held stationary while the other rotates. The top plate has a section an opening to allow balls to enter and exit the rill plates. These plates have fine circumferential grooves that the balls track in. The balls are run through the machine long enough so that each ball passes through multiple of these grooves, which ensures each ball is the same size, even if a particular groove is out of specification. The controllable machine variables are the amount of pressure applied, the speed of the plates, and how long the balls are left in the machine.

During the operation coolant is pumped between the rill plates because the high pressure between the plates and friction create excess heat. The high pressure applied to the balls also induces cold working, which strengthens the balls.

Sometimes the balls are then run through a *soft grinding* process afterward to improve precision. This is done in the same type of machine, but the rill plates are replaced with grinding stones.

If the balls are steel they are then heat treated. After heat treatment they are descaled to remove any residue or by-products.

The balls are then *hard ground*. They are ground in the same type of machine as used before, but either an abrasive is introduced into coolant or the rotating plate is replaced with a very hard fine-grain grinding wheel. This step can get the balls within ±0.0001 in (0.0025 mm). If the balls need more precision then they are lapped, again in the same type of machine. However, this time the rill plates are made of a softer material, usually cast iron, less pressure is applied, the plate is rotated slowly. This step is what gives bearing balls their shiny appearance and can bring the balls between grades 10 and 48.

If even more precision is needed then proprietary chemical and mechanical processes are usually used.

The inspection of bearing balls was one of the case studies in Frederick Winslow Taylor's classic *Principles of Scientific Management*.

Plastic

Plastic bearing balls are made in the same manner as described above.

Ceramic

Ceramic bearing balls are made of sintered materials that are then ground to size and shape as above. Common materials include: silicon nitride and zirconium oxide.

Materials

Common materials include carbon steel, stainless steel, chrome steel, brass, aluminium, tungsten carbide, platinum, gold, titanium, plastic. Other less common materials include copper, monel, k-monel, lead, silver, glass, and niobium.

Material comparison for common bearing balls

Material	UNS 52100	Stainless steel 440C	M50	BG-42	REX-20	440NDUR	Haynes 25	S13N4	BECU	455	C276
Hardness [HRC]	60	58	62	66	60	50	70	40	50	40	
Temperature limit [°F]	300	300	400	600	300	1200	1500	400	500	1000	
Corrosion resistance	1	3	1	2	1	4	5	5	1	4	5
Cost	1	1	1	2	3	1	5	5	3	2	4
Availability	1	1	2	2	2	4	5	3	3	2	4
Magnetic	Magnetic	Magnetic	Magnetic	Magnetic	Magnetic	Magnetic	Non-magnetic	Non-magnetic	Non-magnetic	Magnetic	Magnetic
Size limit	None	None	None	None	None	None	1.5 in (38 mm)		None	None	5 in (130 mm)
Relative load capacity	3	2	4	4	5	3	1	5	1	1	1
Relative fatigue life	3	2	4	4	5	3	1	5	1	1	1

Atypical uses

One interesting atypical use for bearing balls is at San Francisco International Airport. The building is supported by 267 columns, each of which rests on a steel ball with a diameter of 5 feet (1.5 m). The ball sits in a concave foundation. If an earthquake occurs, the ground can move up to 20 inches (0.51 m) in any direction, as the columns roll on their bases. This is an effective way to separate the building from the movement of the ground. After the earthquake has ended, the columns are re-centered on their bases by the force of gravity.

Ball joint

A VW ball joint

In an automobile, **ball joints** are spherical bearings that connect the control arms to the steering knuckles. More specifically, a ball joint is a steel bearing stud and socket enclosed in a steel casing. The bearing stud is tapered and threaded. It fits into a tapered hole in the steering knuckle. A protective encasing prevents dirt from getting into the joint assembly. Motion control ball joints tend to be retained with an internal spring, which helps to prevent vibration problems in the linkage. Commonly found in automotive throttle linkages, throttle body set ups, these are also widely used on construction equipment, the end of gas springs and in children's toys.

Theory

A ball joint is used for allowing three rotations. It fixes the three possible translations (X,Y,Z).

Purpose

Ball joints are the pivot between the wheels and the suspension of an automobile. Ball joints play a critical role in the safe operation of an automobile's steering and suspension. Ball joints can also be found in most linkage systems for motion control applications, and should not be confused with spherical rod end bearings, which are a different design.

Maintenance

Sealed ball joints do not require lubrication as they are "lubed for life" but standard ball joints must be lubed from time to time. It's best to inspect standard ball joints once a year. Generally speaking, standard ball joints will outlive sealed ones because eventually the seal will break, causing the joint to dry out and rust. While there is no exact lifespan that can be put on a sealed ball joint, they can fail as early as 80,000 miles. Signs of a failing ball joint start with a clicking or snapping sound when the wheel is turned and eventually turns into a squeaking sound at the end of a stop, when the gas pedal is used and/or also when hitting bumps. Another symptom could be 'thud' noises coming from front suspension when going over bumps.

If a ball joint fails, the results can be dangerous as the wheel's angle becomes unconstrained, causing loss of control. Because the tire will be at an unintended angle, the vehicle will come to an abrupt halt damaging the tires. Also, during failure, debris can damage other parts of the vehicle.

Ball spline

Ball splines (Ball Spline bearings) are a special type of linear motion bearing that are used to provide nearly frictionless linear motion while allowing the member to transmit torque simultaneously. There are grooves ground along the length of the shaft (thus forming splines) for the recirculating ground balls to run inside. The outer shell that houses the balls is called a nut rather than a bushing, but is not a nut in the traditional sense—it is not free to rotate about the shaft, but is free to travel up and down the shaft.

By increasing the contact area of the ball bearings on the shaft to approximately 45 degrees, the side load and direct load carrying capabilities are greatly increased. Each nut can be individually preloaded at the factory to decrease the available radial play to ensure rigidity. This process not only increases the contact area, increasing direct loading capabilities, but it also restricts any radial movement, increasing the overhung moment capabilities. This creates a sturdier structure that can handle a very strenuous working environment.

Chapter 11

Spring (Device)

Helical or *coil* springs designed for tension

Compression springs store energy when compressed

The English longbow - a simple but very powerful spring made of yew, measuring 2 m (6 ft 6 in) long, with a 470 N (105 lbf) draw force

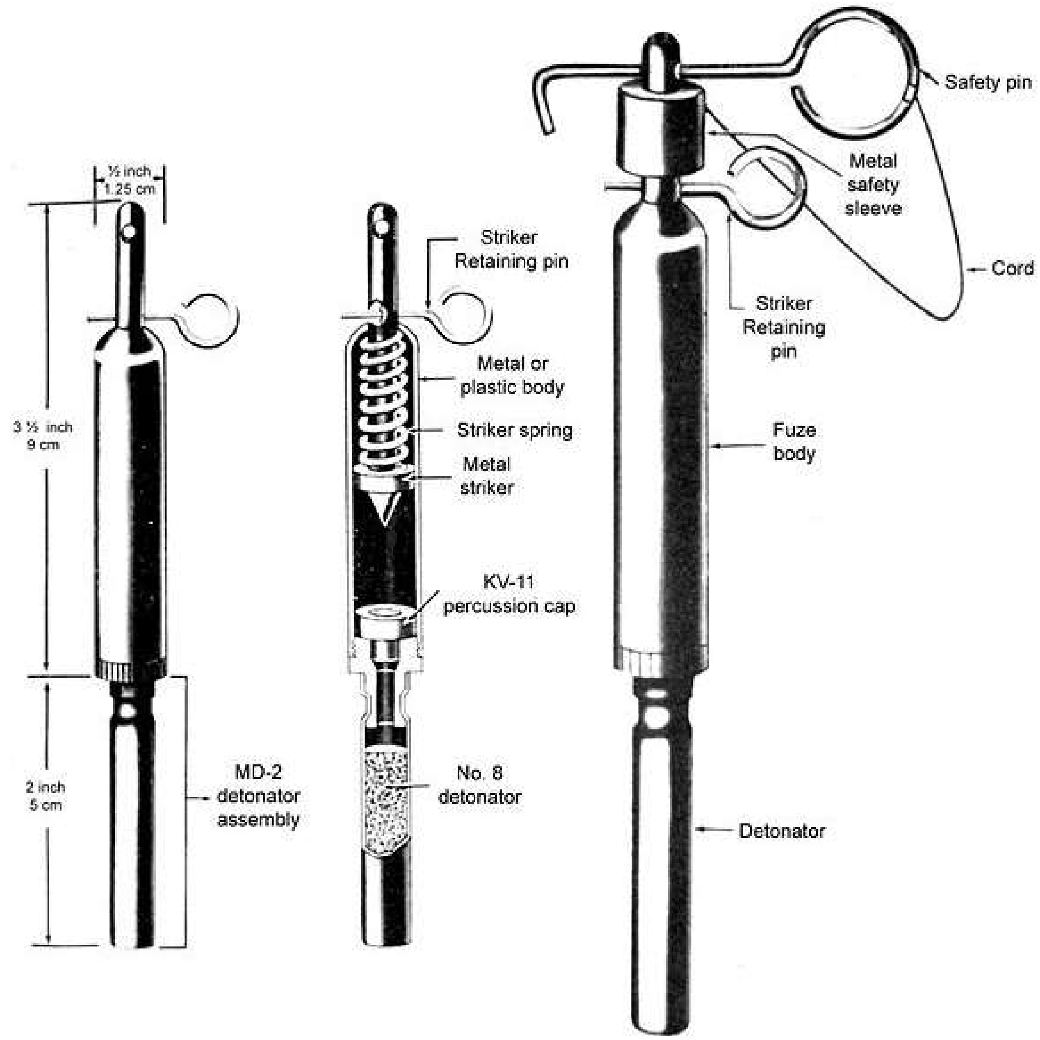

Military boobytrap firing device from USSR (normally connected to a tripwire) showing spring-loaded firing pin

A **spring** is an elastic object used to store mechanical energy. Springs are usually made out of hardened steel. Small springs can be wound from pre-hardened stock, while larger ones are made from annealed steel and hardened after fabrication. Some non-ferrous metals are also used including phosphor bronze and titanium for parts requiring corrosion resistance and beryllium copper for springs carrying electrical current (because of its low electrical resistance).

When a spring is compressed or stretched, the force it exerts is proportional to its change in length. The *rate* or *spring constant* of a spring is the change in the force it exerts, divided by the change in deflection of the spring. That is, it is the gradient of the force versus deflection curve. An extension or compression spring has units of force divided by distance, for example lbf/in or N/m. Torsion springs have units of force multiplied by distance divided by angle, such as N·m/rad or ft·lbf/degree. The inverse of spring rate is compliance, that is: if a spring has a rate of 10 N/mm, it has a compliance of 0.1 mm/N.

The stiffness (or rate) of springs in parallel is additive, as is the compliance of springs in series.

Depending on the design and required operating environment, any material can be used to construct a spring, so long as the material has the required combination of rigidity and elasticity: technically, a wooden bow is a form of spring.

History

Simple non-coiled springs were used throughout human history e.g. the bow (and arrow). In the Bronze Age more sophisticated spring devices were used, as shown by the spread of tweezers in many cultures. Ctesibius of Alexandria developed a method for making bronze with spring-like characteristics by producing an alloy of bronze with an increased proportion of tin, and then hardening it by hammering after it is cast.

Coiled springs appeared early in the 15th century, in door locks. The first spring powered-clocks appeared in that century and evolved into the first large watches by the 16th century.

In 1676 British physicist Robert Hooke discovered the principle behind springs' action, that the force it exerts is proportional to its extension, now called Hooke's law.

Types

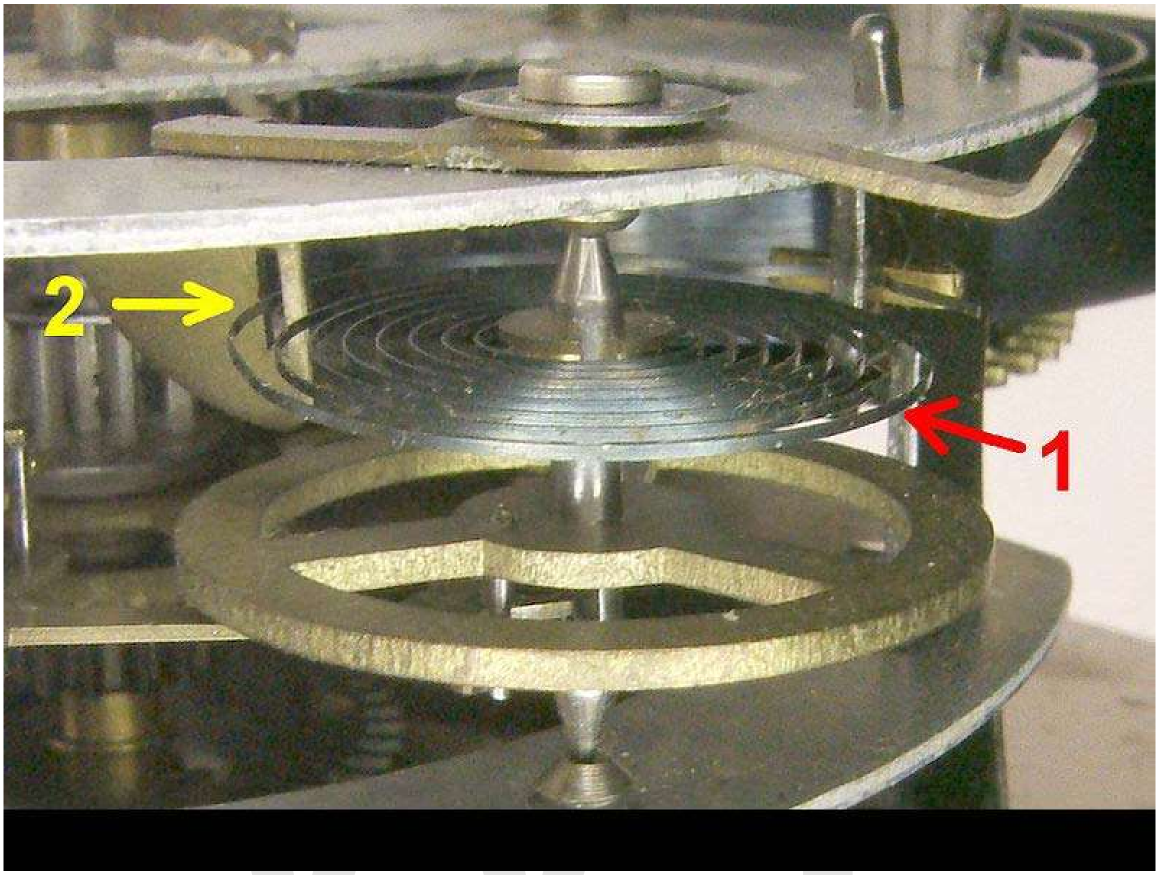

A spiral torsion spring, or hairspring, in an alarm clock.

A volute spring. Under compression the coils slide over each other, so affording longer travel.

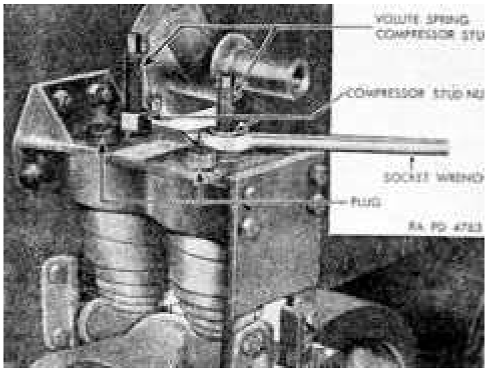

Vertical volute springs of Stuart tank

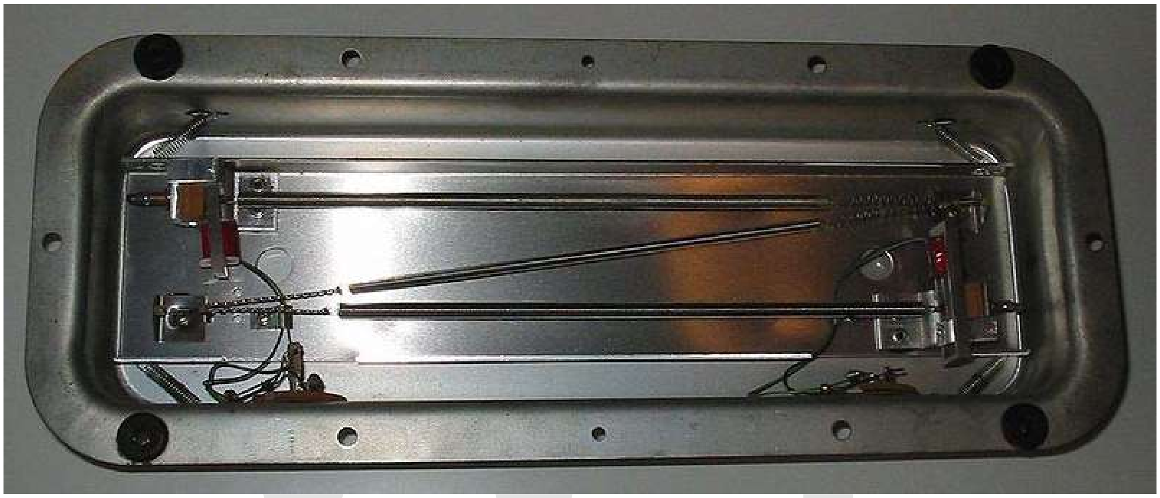

Tension springs in a folded line reverberation device.

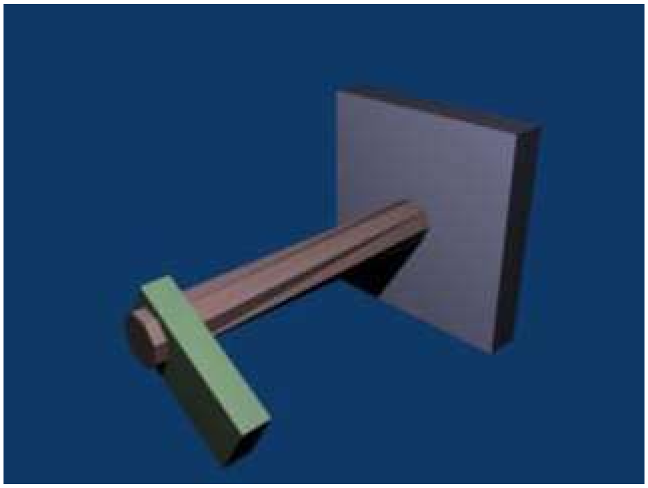

A torsion bar twisted under load

Leaf spring on a truck

Springs can be classified depending on how the load force is applied to them:

- Tension/Extension spring - the spring is designed to operate with a tension load, so the spring stretches as the load is applied to it.
- Compression spring - is designed to operate with a compression load, so the spring gets shorter as the load is applied to it.
- Torsion spring - unlike the above types in which the load is an axial force, the load applied to a torsion spring is a torque or twisting force, and the end of the spring rotates through an angle as the load is applied.

They can also be classified based on their shape:

- Coil spring - this type is made of a coil or helix of wire
- Flat spring - this type is made of a flat or conical shaped piece of metal.

The most common types of spring are:

- Cantilever spring - a spring which is fixed only at one end.
- Coil spring or helical spring - a spring (made by winding a wire around a cylinder) and the conical spring - these are types of torsion spring, because the

wire itself is twisted when the spring is compressed or stretched. These are in turn of two types:

  - *Compression springs* are designed to become shorter when loaded. Their turns (loops) are not touching in the unloaded position, and they need no attachment points.
    - A *volute spring* is a compression spring in the form of a cone, designed so that under compression the coils are not forced against each other, thus permitting longer travel.
  - *Tension* or *extension springs* are designed to become longer under load. Their turns (loops) are normally touching in the unloaded position, and they have a hook, eye or some other means of attachment at each end.
- Hairspring or balance spring - a delicate spiral torsion spring used in watches, galvanometers, and places where electricity must be carried to partially-rotating devices such as steering wheels without hindering the rotation.
- Leaf spring - a flat springy sheet, used in vehicle suspensions, electrical switches, bows.
- V-spring - used in antique firearm mechanisms such as the wheellock, flintlock and percussion cap locks.

Other types include:

- Belleville washer or Belleville spring - a disc shaped spring commonly used to apply tension to a bolt (and also in the initiation mechanism of pressure-activated landmines).
- Constant-force spring — a tightly rolled ribbon that exerts a nearly constant force as it is unrolled.
- Gas spring - a volume of gas which is compressed.
- Ideal Spring - the notional spring used in physics: it has no weight, mass, or damping losses.
- Mainspring - a spiral ribbon shaped spring used as a power source in watches, clocks, music boxes, windup toys, and mechanically powered flashlights
- Negator spring - a thin metal band slightly concave in cross-section. When coiled it adopts a flat cross-section but when unrolled it returns to its former curve, thus producing a constant force throughout the displacement and *negating* any tendency to re-wind. The commonest application is the retracting steel tape rule.
- Progressive rate coil springs - A coil spring with a variable rate, usually achieved by having unequal pitch so that as the spring is compressed one or more coils rests against its neighbour.
- Rubber band - a tension spring where energy is stored by stretching the material.
- Spring washer - used to apply a constant tensile force along the axis of a fastener.
- Torsion spring - any spring designed to be twisted rather than compressed or extended. Used in torsion bar vehicle suspension systems.
- Wave spring - a thin spring-washer into which waves have been pressed.

Physics

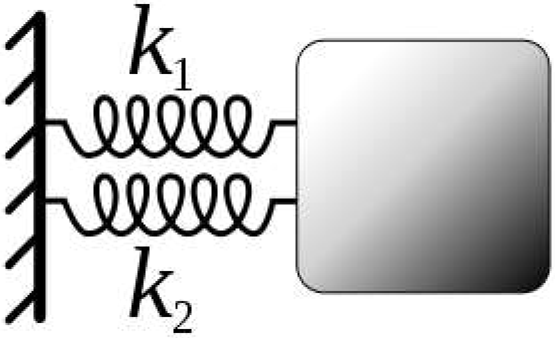

Two springs attached to a wall and a mass. In a situation like this, the two springs can be replaced by one with a spring constant of $k_{eq}=k_1+k_2$.

Hooke's law

Most springs (not stretched or compressed beyond the elastic limit) obey Hooke's law, which states that the force with which the spring pushes back is linearly proportional to the distance from its equilibrium length:

$$F = -kx,$$

where

x is the displacement vector - the distance and direction in which the spring is deformed
F is the resulting force vector - the magnitude and direction of the restoring force the spring exerts
k is the **spring constant** or **force constant** of the spring.

Coil springs and other common springs typically obey Hooke's law. There are useful springs that don't: springs based on beam bending can for example produce forces that vary nonlinearly with displacement.

Simple harmonic motion

Since force is equal to mass, m, times acceleration, a, the force equation for a spring obeying Hooke's law looks like:

$$F = ma \quad \Rightarrow \quad -kx = ma.$$

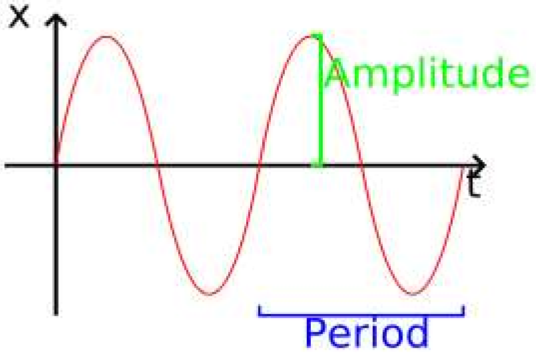

The displacement, *x*, as a function of time. The amount of time that passes between peaks is called the period.

The mass of the spring is assumed small in comparison to the mass of the attached mass and is ignored. Since acceleration is simply the second derivative of x with respect to time,

$$-kx = m\frac{d^2x}{dt^2}.$$

This is a second order linear differential equation for the displacement *x* as a function of time. Rearranging:

$$\frac{d^2x}{dt^2} + \frac{k}{m}x = 0,$$

the solution of which is the sum of a sine and cosine:

$$x(t) = A\sin\left(t\sqrt{\frac{k}{m}}\right) + B\cos\left(t\sqrt{\frac{k}{m}}\right).$$

A and *B* are arbitrary constants that may be found by considering the initial displacement and velocity of the mass. The graph of this function with *B* = 0 (zero initial position with some positive initial velocity) is displayed in the image on the right.

Theory

In classical physics, a spring can be seen as a device that stores potential energy, specifically elastic potential energy, by straining the bonds between the atoms of an elastic material.

Hooke's law of elasticity states that the extension of an elastic rod (its distended length minus its relaxed length) is linearly proportional to its tension, the force used to stretch it.

Similarly, the contraction (negative extension) is proportional to the compression (negative tension).

This law actually holds only approximately, and only when the deformation (extension or contraction) is small compared to the rod's overall length. For deformations beyond the elastic limit, atomic bonds get broken or rearranged, and a spring may snap, buckle, or permanently deform. Many materials have no clearly defined elastic limit, and Hooke's law can not be meaningfully applied to these materials.

Hooke's law is a mathematical consequence of the fact that the potential energy of the rod is a minimum when it has its relaxed length. Any smooth function of one variable approximates a quadratic function when examined near enough to its minimum point; and therefore the force — which is the derivative of energy with respect to displacement — will approximate a linear function.

Force of fully compressed spring

$$F_{max} = \frac{Ed^4(L - nd)}{16(1 + \nu)(D - d)^3 n}$$

where

E - Young's modulus
d - spring wire diameter
L - free length of spring
n - number of active windings
ν - Poisson ratio
D - spring outer diameter

Zero-length springs

"Zero-length spring" is a term for a specially-designed coil spring that would exert zero force if it had zero length. That is, in a line graph of the spring's force versus its length, the line passes through the origin. Obviously a coil spring cannot contract to zero length because at some point the coils will touch each other and the spring will not be able to shorten any more. Zero length springs are made by manufacturing a coil spring with built-in tension, so if it *could* contract further, the equilibrium point of the spring, the point at which its restoring force is zero, occurs at a length of zero. In practice, zero length springs are made by combining a "negative length" spring, made with even more tension so its equilibrium point would be at a "negative" length, with a piece of inelastic material of the proper length so the zero force point would occur at zero length.

A spring with zero length can be attached to a mass on a hinged boom in such a way that the force on the mass is almost exactly balanced by the vertical component of the force from the spring, whatever the position of the boom. This creates a pendulum with very long period. Long-period pendulums enable seismometers to sense the slowest waves from earthquakes. The LaCoste suspension with zero-length springs is also used in gravimeters because it is very sensitive to changes in gravity. Springs for closing doors are often made to have roughly zero length so that they will exert force even when the door is almost closed, so it will close firmly.

Uses

- Balance springs mechanical timepieces
- Buckling spring keyboards
- In CD players
- Inside a pen
- Mattress
- Pogo Stick
- Slinky
- Trampoline
- Vehicle suspension

Chapter 12

Coil Spring and Springboard

Coil spring

A compression coil spring

A tension coil spring

Oxy-cut spring showing deformation due to loss of tempering in adjacent turn

A selection of conical coil springs

A **Coil spring**, also known as a *helical spring*, is a mechanical device, which is typically used to store energy and subsequently release it, to absorb shock, or to maintain a force between contacting surfaces. They are made of an elastic material formed into the shape of a helix which returns to its natural length when unloaded.

Coil springs are a special type of torsion spring: the material of the spring acts in torsion when the spring is compressed or extended.

Metal coil springs are made by winding a wire around a shaped former - a cylinder is used to form cylindrical coil springs.

Variants

The two usual types of coil spring are:

- Tension coil springs, designed to resist stretching. They usually have a hook or eye form at each end for attachment.
- Compression coil springs, designed to resist being compressed. A typical use for compression coil springs is in car suspension systems.
- expansion coil spring.

Degradation

Many types of coil spring are wound in an annealed (soft) condition and then tempered to achieve their strength as a spring. Over time, this tempering can be lost and the spring will *sag* because it can no longer withstand the loads applied. Such springs can be *re-set* by annealing, returning to their original length (or deliberately setting them to a different length) and then re-tempering. Damage to springs, such as using oxy-acetylene to cut the end off a car suspension spring to lower a vehicle's ride height, can destroy the tempering in localised areas of the spring.

Springboard

A **springboard** or **diving board** is used for diving and is a board that is itself a spring, i.e. a linear flex-spring, of the cantilever type.

Springboards are commonly fixed by a hinge at one end (so they can be flipped up when not in use), and the other end usually hangs over a swimming pool, with a point midway between the hinge and the end resting on an adjustable fulcrum.

Springboard materials

Modern springboards are made out of a single-piece extrusion of aircraft-grade aluminum. The Maxiflex Model B, the board used in all major competitive diving events, is made out of such aluminum, and is heat treated for a yield strength of 50,000 psi. The slip-resistant surface of the board is created using an epoxy resin, finished with a laminate of flint silica and alumina in between the top coats of resin. This thermal-cured resin is aqua-colored to match the water of a clean pool.

Adjustment of the spring constant

The spring constant of a springboard is usually adjusted by way of a fulcrum that is located approximately mid way along the springboard. Springboards are usually operated in a linear regime where they approximately obey Hooke's law. When loaded with a diver, the combination of the diver's approximately constant mass, and the constant stiffness of the spring(board) result in a resonance frequency that is adjustable by way of the spring constant (set by the fulcrum position). Since the resulting system is in an approximately linear regime, it may be modeled fairly accurately by a second order differential equation. Typically the resonance frequency can be adjusted over a range of a 2:1 or 3:1 ratio.

Counter-intuitive user-interface

The fulcrum usually travels over a range of approximately 0.75 metre (30 inches), and is set by way of a knob that is approximately 0.35 m (14 inches) in diameter. To stiffen the spring (as if tightening it), the knob is usually turned counter clockwise. This is counter intuitive, since usually things are tightened by turning clockwise. Additionally, if standing on the springboard, it is difficult to push the wheel with the foot, because the top of it needs to turn the other way from the way it moves. This is because the gearlike mechanism (usually a "soft gear" made of rubber) is on the board and not the base, so the wheel pivots against the board when rotated. Thus users often need to bend down and set the wheel, or come down from the board to set the wheel. Thus it would be much better if the gearing were on the base so that the wheel could be pushed with the foot, but tradition (consistency from board to board) dictactes maintaining a "backwards" convention., ,

- Note - Standing behind or in front of the knob, rather than directly above it, will give you better leverage to move the fulcrum. This is accomplished by holding on to the hand rails and leaning the body a few degrees, then placing your foot as low as possible on the knob. In this way, it is possible to move even the most difficult fulcrum.

Heights of springboards

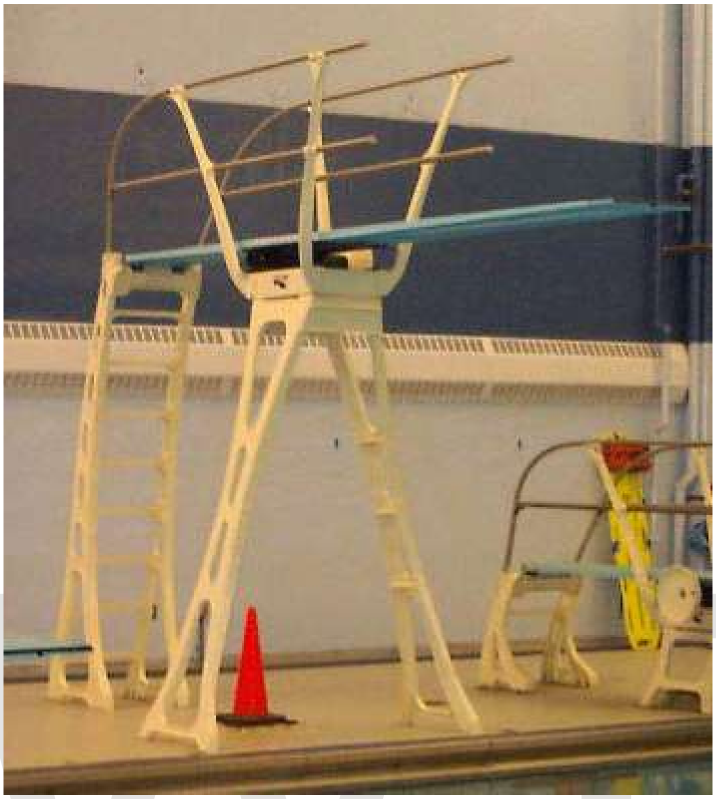

Three and One Metre Springboards

Springboards are usually located either 1.0 metre or 3.0 metres above the water surface. It is very seldom that one is mounted at a height other than these two standard heights.

Historical heights of springboards

Some years ago, springboards, usually made of wood, were located at heights of either 10 feet (approximately 3m), or 20 feet (approx. 6m), above the water.

Home springboards

After an incident in Washington state in 1993, most US and other pool builders are reluctant to equip a residential swimming pool with a diving springboard so home diving pools are much less common these days. In the incident, 14-year-old Shawn Meneely made a "suicide dive" (his hands at his sides - so his head hit the bottom first) in a private swimming pool and was seriously injured (tetraplegic). Family lawyer Fred Zeder successfully sued the diving board manufacturer, the pool builder, and the National Spa and Pool Institute over the inappropriate depth of the pool. The NSPI had specified a minimum depth of 7 ft 6 in (2.55m) which proved to be insufficient in the above case. The pool into which Meneelly dived was not constructed to the published standards. The standards had changed after the diving board was installed on the non-compliant pool by the homeowner. But the courts held that the pool "was close enough" to the standards to hold NSPI liable. The multi-million dollar lawsuit was eventually settled in 2001 for $6,600,000USD ($US8,000,000 after interest was added) in favor of the plaintiff. The NSPI was held to be liable, and was financially strained by the case. It filed twice for Chapter 11 bankruptcy protection and was successfully reorganized into a new swimming pool industry association.

Chapter 13

Balance Spring

A **balance spring**, or **hairspring**, is a part used in mechanical timepieces. The balance spring, working together with the balance wheel, controls the speed of movement of the parts in the timepiece. The **regulator** lever is used to adjust the speed so that the timepiece keeps accurate time.

The invention of the balance spring in the 17th century greatly increased the accuracy of pocketwatches and other timepieces by controlling the speed of movement of the mechanism to a nearly-constant rate. Improvements since then made timepieces even more accurate by reducing the effect of temperature, and also the effect of the driving force, which for a mainspring decreases as the mainspring winds down.

The balance spring is a fine spiral or helical spring used in mechanical watches, marine chronometers, and other timekeeping mechanisms to control the rate of oscillation of the balance wheel. A balance spring usually has a regulator lever to adjust the rate of the timepiece, but other designs use adjusting screws on the balance wheel instead. The balance spring is an integral part of the balance wheel, because it reverses the direction of the balance wheel so it oscillates back and forth. The balance spring and balance wheel together form a harmonic oscillator, whose resonant period is resistant to changes from perturbing forces, which is what makes it a good timekeeping device.

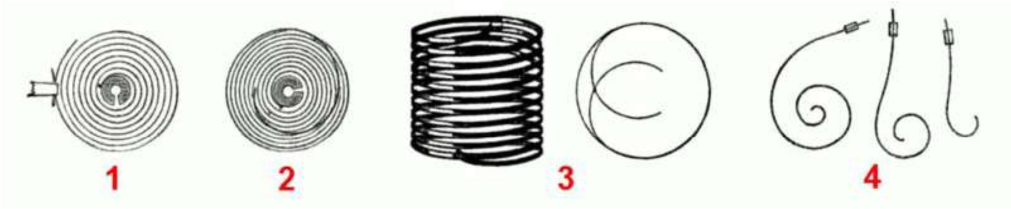

Types of balance springs: (1) flat spiral, (2) Breguet overcoil, (3) chronometer helix, showing curving ends, (4) early balance springs.

History

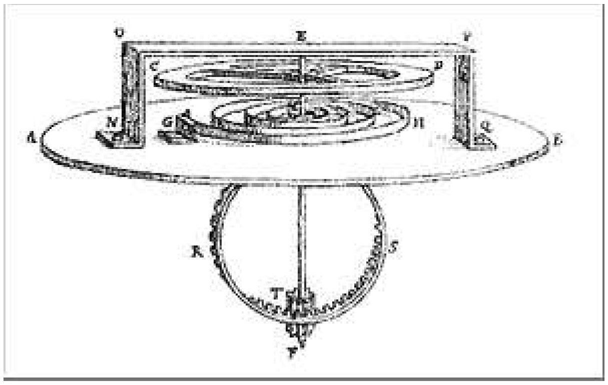

Drawing of one of his first balance springs, attached to a balance wheel, by Christiaan Huygens, inventor of the balance spring, published in his letter in the *Journal des Sçavants* of 25 February 1675.

There is some dispute as to whether it was invented around 1660 by British physicist Robert Hooke or Dutch scientist Christian Huygens, with the likelihood being that Hooke first had the idea, but Huygens built the first functioning watch that used a balance spring. Before that time, balance wheels or foliots without springs were used in clocks and watches, but they were very sensitive to fluctuations in the driving force, causing the timepiece to slow down as the mainspring unwound. The introduction of the balance spring effected an enormous increase in the accuracy of pocketwatches, from perhaps several hours per day to 10 minutes per day, making them useful timekeepers for the first time. The first balance springs had only a few turns.

A few early watches had a Barrow regulator, which used a worm drive, but the first widely used regulator was invented by Thomas Tompion around 1680. In the Tompion regulator the curb pins were mounted on a semicircular toothed rack, which was adjusted by fitting a key to a cog and turning it. The modern regulator, a lever pivoted concentrically with the balance wheel, was patented by Joseph Bosley in 1755, but it didn't replace the Tompion regulator until the early 19th century.

Regulator

In order to adjust the rate, the balance spring usually has a *regulator*, a moveable lever with a narrow slit on the end through which the last turn of the spring passes. The portion of the spring after the slit is held stationary, so the slit controls the usable length of the spring. Moving the regulator slides the slit up or down the spring, changing its effective length. Moving it away from the spring's attachment point (stud) shortens the spring, making it stiffer, increasing the balance's oscillation rate, and making the timepiece gain time.

In older watches, the slit is the gap between two tiny pins, called the Curb Pins.

The regulator interferes slightly with the motion of the spring, causing inaccuracy, so precision timepieces like marine chronometers and some high end watches are *free sprung*, meaning they don't have a regulator. Instead, their rate is adjusted by timing screws on the balance wheel.

There are two principal types of Balance Spring Regulator.

- The Tompion Regulator, in which the Curb Pins are mounted on a sector-rack, moved by a pinion. The pinion is usually fitted with a graduated silver or steel disc.
- The Bosley Regulator, as described above, in which the Pins are mounted on a lever pivoted coaxially with the Balance, the extremity of the lever being able to be moved over a graduated scale. There are several variants of this, including the "Snail" regulator, in which the lever is sprung against a cam of spiral profile which can be turned, and the Micrometer, in which the lever is moved by a worm gear.

There is also a "Hog's Hair" or "Pig's Bristle" regulator, in which stiff fibres are positioned at the extremities of the Balance's arc, and bring it to a gentle halt before throwing it back. The Watch is accelerated by shortening the arc. This is not a Balance Spring Regulator, being used in the earliest Watches before the Balance Spring was invented.

There is also a Barrow Regulator, but this is really the earlier of the two principal methods of giving the Mainspring "set-up tension"; that required to keep the Fusee chain in tension but not enough to actually drive the Watch. Verge Watches can be regulated by adjusting the set-up tension, but if any of the previously described Regulators is present then this is not usually done.

Material

A number of materials have been used for balance springs. Early on, steel was used, but without any hardening or tempering process applied; as a result, these springs would gradually weaken and the watch would start losing time. Some watchmakers, for example John Arnold, used gold, which avoids the problem of corrosion, but retains the problem of gradual weakening. Hardened and tempered steel was first used by John Harrison and subsequently remained the material of choice until the 20th century.

In 1833, E. J. Dent (maker of the Great Clock of the Houses of Parliament) experimented with a glass Balance Spring. This was much less affected by heat than steel, reducing the Compensation required, and also didn't rust. Other trials with glass revealed that they were difficult and expensive to make, and there was a widespread opinion that they must be fragile. This latter objection is proved false by glass-fibre loft insulation and fibre-optic cables.

Effect of temperature

The modulus of elasticity of materials is dependent on temperature. For most materials, this temperature coefficient is large enough that variations in temperature significantly affect the timekeeping of a balance wheel and balance spring. The earliest makers of watches with balance springs, such as Robert Hooke and Christian Huygens observed this effect without finding a solution to it.

John Harrison, in the course of his development of the marine chronometer, solved the problem by a "compensation curb" -- essentially a bimetallic thermometer which adjusted the effective length of the balance spring as a function of temperature. While this scheme worked well enough to allow Harrison to meet the standards set by the Longitude Act, it was not widely adopted.

Around 1765, Pierre Le Roy (son of Julien Le Roy) invented the compensation balance, which became the standard approach for temperature compensation in watches and chronometers. In this approach, the shape of the balance is altered, or adjusting weights are moved on the spokes or rim of the balance, by a temperature-sensitive mechanism. This changes the moment of inertia of the balance wheel, and the change is adjusted such that it compensates for the change in modulus of elasticity of the balance spring. The compensating balance design of Thomas Earnshaw, which consists simply of a balance wheel with bimetallic rim, became the standard solution for temperature compensation.

Elinvar

While the compensating balance was effective as a way to compensate for the effect of temperature on the balance spring, it could not provide a complete solution. The basic design suffers from "middle temperature error": if the compensation is adjusted to be exact at extremes of temperature, then it will be slightly off at temperatures between those extremes. Various "auxiliary compensation" mechanisms were designed to avoid this, but they all suffer from being complex and hard to adjust.

Around 1900, a fundamentally different solution was created by Charles Édouard Guillaume, inventor of elinvar. This is a nickel-steel alloy with the property that the modulus of elasticity is essentially unaffected by temperature. A watch fitted with an elinvar balance spring requires either no temperature compensation at all, or very little. This simplifies the mechanism, and it also means that middle temperature error is eliminated as well, or at a minimum is drastically reduced.

Isochronism

A balance spring obeys Hooke's Law: the restoring torque is proportional to the angular displacement. When this property is exactly satisfied, the balance spring is said to be *isochronous*, and the period of oscillation is independent of the amplitude of oscillation. This is an essential property for accurate timekeeping, because no mechanical drive train can provide absolutely constant driving force. This is particularly true in watches and portable clocks which are powered by a mainspring, which provides a diminishing drive force as it unwinds. Another cause of varying driving force is friction, which varies as the lubricating oil ages.

Early watchmakers empirically found approaches to make their balance springs isochronous. For example, John Arnold in 1776 patented a helical (cylindrical) form of the balance spring, in which the ends of the spring were coiled inwards. In 1861 M. Phillips published a theoretical treatment of the problem. He demonstrated that a balance spring whose center of gravity coincides with the axis of the balance wheel is isochronous.

Period of oscillation

The balance spring is an essential part of the balance wheel; together they form a harmonic oscillator. The balance spring provides the linear restoring force that reverses the motion of the wheel so it oscillates back and forth. The motion of the balance wheel is approximately simple harmonic motion, i.e., a sinusoidal motion of constant period. Its resonant period is resistant to changes from perturbing forces, which is what makes it a good timekeeping device. The stiffness of the spring, its spring coefficient, κ in N-m/radian, along with the balance wheel's moment of inertia, I in kg-m^2, determines the wheel's oscillation period T in seconds:

$$T = 2\pi\sqrt{I/\kappa}$$

This period controls the rate of the timepiece.

Chapter 14

Leaf Spring

A traditional semi-elliptical Hotchkiss leaf spring arrangement. On the left, the spring is connected to the frame through a shackle.

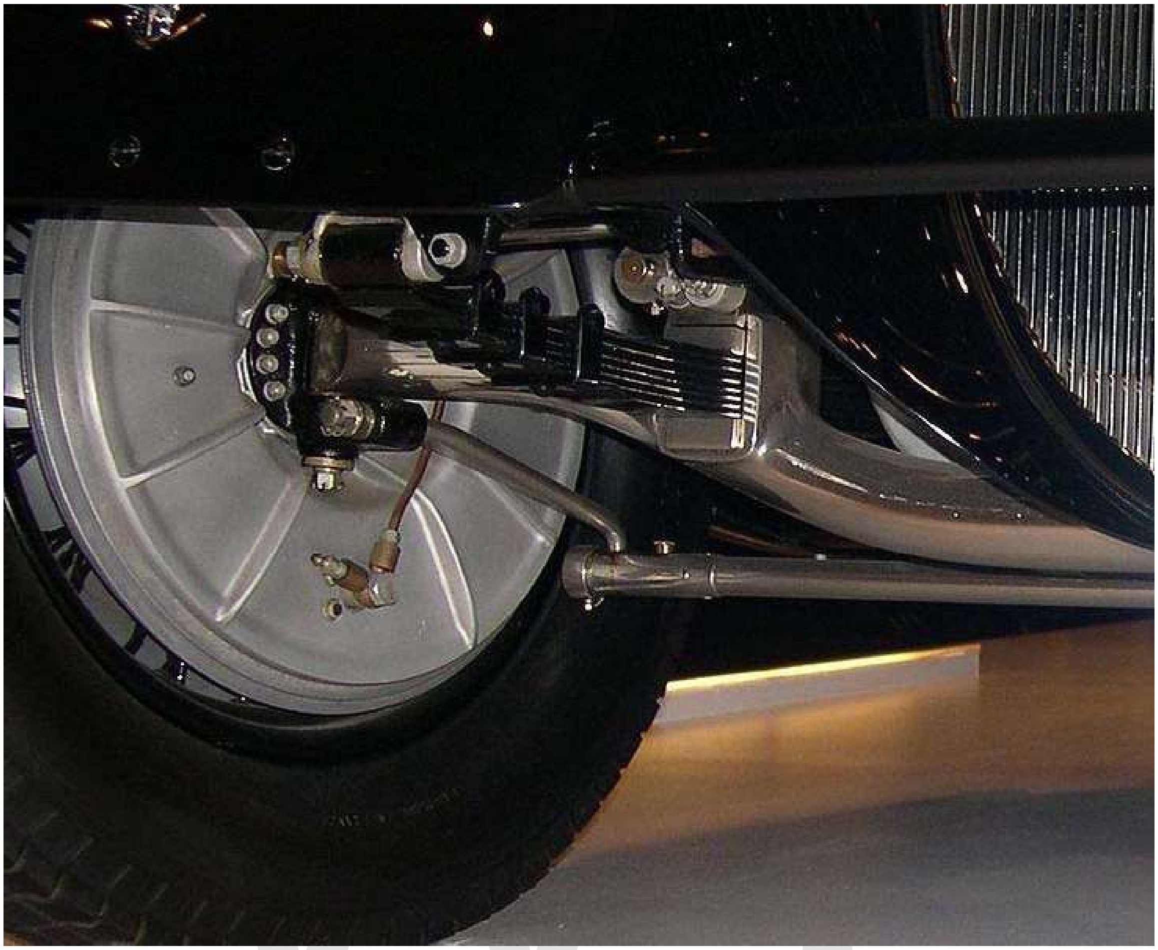

Quarter-elliptical spring in a 1937 Bugatti Type 57SC

Originally called *laminated* or *carriage spring*, a **leaf spring** is a simple form of spring, commonly used for the suspension in wheeled vehicles. It is also one of the oldest forms of springing, dating back to medieval times.

An advantage of a leaf spring over a helical spring is that the end of the leaf spring may be guided along a definite path.

Sometimes referred to as a **semi-elliptical spring** or **cart spring**, it takes the form of a slender arc-shaped length of spring steel of rectangular cross-section. The center of the arc provides location for the axle, while tie holes are provided at either end for attaching to the vehicle body. For very heavy vehicles, a leaf spring can be made from several leaves stacked on top of each other in several layers, often with progressively shorter leaves. Leaf springs can serve locating and to some extent damping as well as springing functions. While the interleaf friction provides a damping action, it is not well controlled and results in stiction in the motion of the suspension. For this reason manufacturers have experimented with mono-leaf springs.

A leaf spring can either be attached directly to the frame at both ends or attached directly at one end, usually the front, with the other end attached through a shackle, a short swinging arm. The shackle takes up the tendency of the leaf spring to elongate when compressed and thus makes for softer springiness. Some springs terminated in a concave end, called a *spoon end* (seldom used now), to carry a swivelling member.

History

There were a variety of leaf springs, usually employing the word "elliptical". "Elliptical" or "full elliptical" leaf springs referred to two circular arcs linked at their tips. This was joined to the frame at the top center of the upper arc, the bottom center was joined to the "live" suspension components, such as a solid front axle. Additional suspension components, such as trailing arms, would be needed for this design, but not for "semi-elliptical" leaf springs as used in the Hotchkiss drive. That employed the lower arc, hence its name. "Quarter-elliptic" springs often had the thickest part of the stack of leaves stuck into the rear end of the side pieces of a short ladder frame, with the free end attached to the differential, as in the Austin Seven of the 1920s. As an example of non-elliptic leaf springs, the Ford Model T had multiple leaf springs over its differential that were curved in the shape of a yoke. As a substitute for dampers (shock absorbers), some manufacturers laid non-metallic sheets in between the metal leaves, such as wood.

Leaf springs were very common on automobiles, right up to the 1970s in Europe and Japan and late 70's in America when the move to front wheel drive, and more sophisticated suspension designs saw automobile manufacturers use coil springs instead. Today leaf springs are still used in heavy commercial vehicles such as vans and trucks, SUVs, and railway carriages. For heavy vehicles, they have the advantage of spreading the load more widely over the vehicle's chassis, whereas coil springs transfer it to a single point. Unlike coil springs, leaf springs also locate the rear axle, eliminating the need for trailing arms and a Panhard rod, thereby saving cost and weight in a simple live axle rear suspension.

A more modern implementation is the parabolic leaf spring. This design is characterised by fewer leaves whose thickness varies from centre to ends following a parabolic curve. In this design, inter-leaf friction is unwanted, and therefore there is only contact between the springs at the ends and at the centre where the axle is connected. Spacers prevent contact at other points. Aside from a weight saving, the main advantage of parabolic springs is their greater flexibility, which translates into vehicle ride quality that approaches that of coil springs. There is a trade-off in the form of reduced load carrying capability, however. The characteristic of parabolic springs is better riding comfort and not as "stiff" as conventional "multi-leaf springs". It is widely used on buses for better comfort. A further development by the British GKN company and by Chevrolet with the Corvette amongst others, is the move to composite plastic leaf springs.

Typically when used in automobile suspension the leaf both supports an axle and locates/ partially locates the axle. This can lead to handling issues (such as 'axle tramp'), as the flexible nature of the spring makes precise control of the unsprung mass of the axle difficult. Some suspension designs which use leaf springs do not use the leaf to locate the axle and do not have this drawback. The Fiat 128's rear suspension is an example.

Manufacturing process

Multi-leaf springs are made as follows:

1. Shearing of flat bar
2. Center punching
3. End Heating process forming (hot & cold process)
    1. Eye Forming / Wrapper Forming
    2. Diamond cutting / end trimming / width cutting / end tapering
    3. End punching / end grooving / end bending / end forging / eye grinding
4. Heat treatment
    1. Center hole punching / nibbing
    2. Camber forming
    3. Quenching
    4. Tempering
5. Surface preparation
    1. Shot peening / stress peening
    2. Painting
6. Eye bush preparation process
    1. Eye reaming / eye boring
    2. Bush insertion
    3. Bush reaming
7. Assemble
    1. Presetting & load testing
    2. Paint touch-up
    3. Marking & packing

Use by Blacksmiths

Because leaf springs are made of relatively high quality steel, they are a favorite material for blacksmiths. In countries such as Nepal, Bangladesh and Pakistan where traditional blacksmiths still produce a large amount of the country's tools, leaf springs from scrapped cars are frequently used to make knives, kukris, and other tools. They are also commonly used by amateur and hobbyist blacksmiths in Western countries.

Chapter 15

Belleville Washer and Gas Spring

Belleville washer

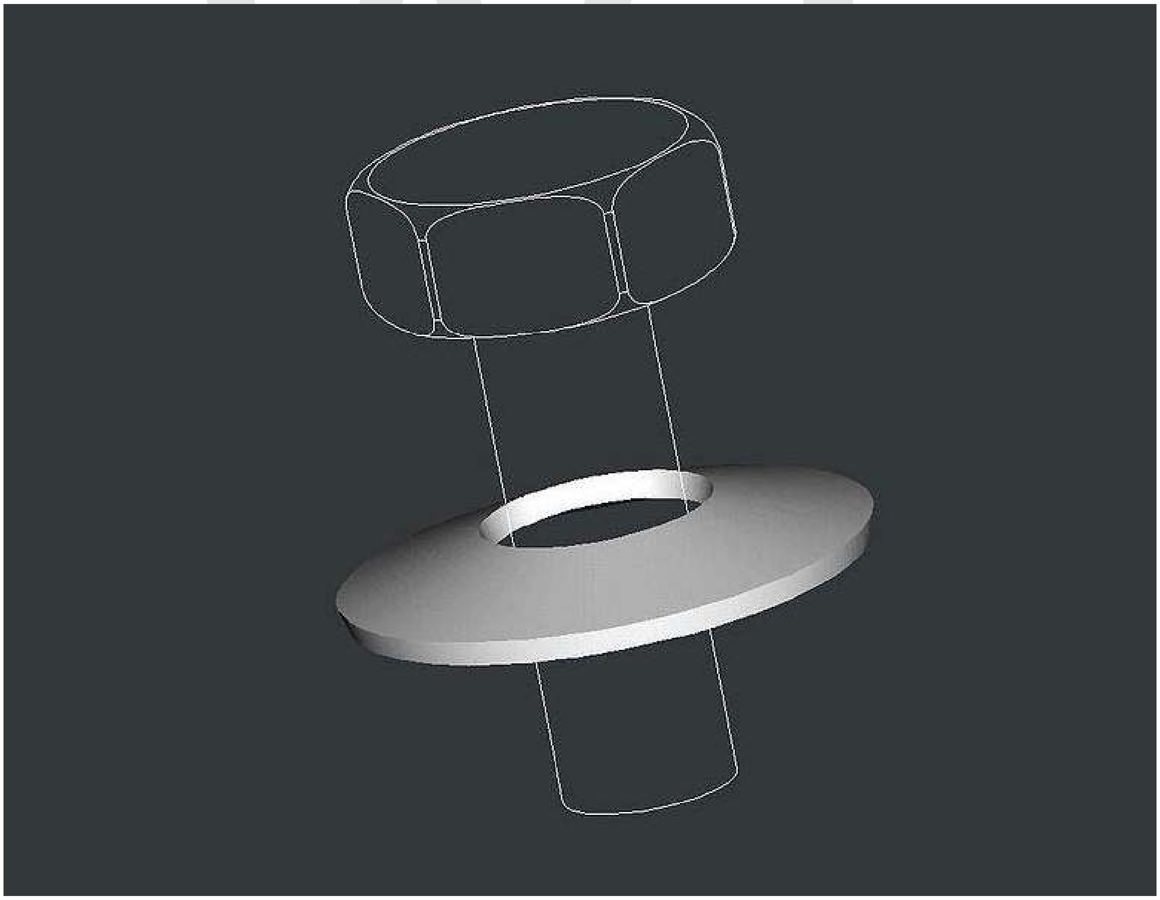

Belleville washer

A **Belleville washer**, also known as a **coned-disc spring**, **conical spring washer**, **disc spring**, **Belleville spring** or **cupped spring washer**, is a type of spring shaped like a washer. It has a frusto-conical shape which gives the washer a spring characteristic. The Belleville name comes from the inventor Julian F. Belleville.

Design and use

Belleville washers are typically used as springs, or to apply a pre-load or flexible quality to a bolted joint or bearing.

Some properties of Belleville washers include: high fatigue life, better space utilization, low creep tendency, and high load capacity with a small spring deflection.

Belleville springs are also used in a number of landmines e.g. the American M15, M14, M1 and the Swedish Tret-Mi.59.

They may also be used as locking devices, but only in applications with low dynamic loads, such as down-tube shifters for bicycles. Belleville washers are seen on Formula One cars, as they provide extremely detailed tuning ability. The World War II-vintage German Junkers Ju 88 aircraft's single strut main gear made primary use of belleville washers as its main shock absorption mechanism. At least one modern aircraft design, the Cirrus SR2x series, uses a Belleville washer setup to damp out nose gear oscillations (or "shimmy").

Belleville washers have been used as return springs in artillery pieces, one example being the French Canet range of marine/coastal cannon from the late 1800's (75 mm, 120mm, 152 mm).

Another example where they aid locking is a joint that experiences a large amount of thermal expansion and contraction. They will supply the required pre-load, but the bolt may have an additional locking mechanism (like Loctite) that would fail without the Belleville.

Stacking

Multiple Belleville washers may be stacked to modify the spring constant or amount of deflection. Stacking in the same direction will add the spring constant in parallel, creating a stiffer joint (with the same deflection). Stacking in an alternating direction is the same as adding springs in series, resulting in a lower spring constant and greater deflection. Mixing and matching directions allow a specific spring constant and deflection capacity to be designed.

Example: 1 Spring is considered to be 1 in Parallel, 1 in Series. (This notation is needed for load calculations)

If n = # of springs in a stack, then: Parallel Stack (n in parallel, 1 in series) - Deflection is equal to that of one spring, Load is equal to that of n x 1 spring. i.e. Stack of 4 in parallel, 1 in series will have the same deflection as that of one spring and the load will be 4 times higher than that of one spring.

Series Stack (1 in parallel, n in series) - Deflection is equal to n x 1 spring, load is equal to that of one spring. i.e. Stack of 1 in parallel, 4 in series will have the same load of one spring and the deflection will be 4 times greater.

Performance considerations

In a parallel stack, hysteresis (load losses) will occur due to friction between the springs. The hysteresis losses can be advantageous in some systems because of the added damping and dissipation of vibration energy. This loss due to friction can be calculated using hysteresis methods. Ideally, no more than 4 springs should be placed in parallel. If a greater load is required, then factor of safety must be increased in order to compensate for loss of load due to friction. Friction loss is not as much of an issue in series stacks

In a series stack, the deflection is not exactly proportional to the number of springs. This is because of a *bottoming out* effect when the springs are compressed to flat. The contact surface area increases once the spring is deflected beyond 95%. This decreases the moment arm and the spring will offer a greater spring resistance. Hysteresis can be used to calculate predicted deflections in a series stack. The number of springs used in a series stack is not as much of an issue as in parallel stacks.

Belleville washers are useful for adjustments because different thicknesses can be swapped in and out and they can be configured differently to achieve essentially infinite tunability of spring rate while only filling up a small part of the technician's tool box. They are ideal in situations where a heavy spring force is required with minimal free length and compression before reaching solid height. The downside, though, is weight, and they are severely travel limited compared to a conventional coil spring when free length is not an issue.

A similar device is a wave washer.

Calculation

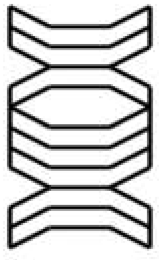

2-3-1-2 stack of washers

If friction and bottoming-out effects are ignored, the spring rate of a stack of identical Belleville washers can be quickly approximated. Counting from one end of the stack, group by the number of adjacent washers in parallel. For example, in the stack of washers to the right, the grouping is 2-3-1-2, because there is a group of 2 washers in parallel, then a group of 3, then a single washer, then another group of 2.

The total spring coefficient is:

$$K = \frac{k}{\sum_{i=1}^{g} \frac{1}{n_i}}$$
$$K = \frac{k}{\frac{1}{2} + \frac{1}{3} + \frac{1}{1} + \frac{1}{2}}$$
$$K = \frac{3}{7}k$$

Where

- n_i = the number of washers in the ith group
- g = the number of groups
- k = the spring constant of one washer

So, a 2-3-1-2 stack (or, since addition is commutative, a 3-2-2-1 stack) gives a spring constant of 3/7 that of a single washer. These same 8 washers can be arranged in a 3-3-2 configuration (K = 6/7*k), a 4-4 configuration (K = 2*k), a 2-2-2-2 configuration (K = 1/2*k), and various other configurations. The number of unique ways to stack *n* washers is defined by the integer partition function *p*(*n*) and increases rapidly with large *n*, allowing fine-tuning of the spring constant. However, each configuration will have a different length, requiring the use of shims in most cases.

Gas spring

CGI of one type of gas spring

A **gas spring** is a type of spring that, unlike a typical metal spring, uses a compressed gas, contained in a cylinder and compressed by a piston, to exert a force. Gas springs are used in automobiles, where they are used to support the weight of doors while they are open. They are also used in furniture, medical, and aerospace applications. Gas springs are also used within the press tooling industry. These units are larger than the normal "strut" type units ranging in force from 2500N to 400,000N (Forty tonnes).

Theory

If a syringe plunger is squeezed with a closed nozzle, the resistance will rapidly rise. In a gas spring the volume is quite large compared to the diameter of the plunger and the gas, which may be dry air or nitrogen, is pre-compressed. Hence if a 1 square inch (6.45 square centimetre) plunger (radius 0.56 in or 1.43 cm) is used with a container with an internal pressure of 30 pounds per square inch (207 kPa), a thirty pound-force (130 N) spring will result. If the volume of gas is large, little increase in strength will result as the rod is pressed in. The gas volume can be altered to change this parameter. The standard gas equation is used to calculate the difference. Pressure x volume / temperature (must be kelvins or degrees Rankine) = pressure x volume / temperature. If the internal plunger has a diaphragm, which extends to the side of the gas tube it will not move. If a fine hole exists it will be a slow-dampened spring, for use on heavy doors and windows. If there is no diaphragm other than the washer to contain it, the result is a quick gas spring, as used on air rifles and recoil buffers. Reducing the gas volume and hence increasing its internal pressure by means of a movable end stop or allowing one tube to slide over another can achieve adjustability. The rod may be hollow by use of clever seals or can be multiple small-diameter rods. A small amount of oil is normally present. The gas may be introduced by Schrader-type valve, using a lip seal around the rod and forcing it to allow gas in by external over pressure or a shuttling O-ring system. Gas springs of high pressure contain a very large amount of energy and could be used as a power pack. In emergency use the gas may be introduced via a gas generator cell as used in air bags. Gas springs are used to operate the main valve on Formula 1 racing cars.

Other forms of standard gas springs

EasyStop adjustable retention force gas spring

A gas spring with adjustable retention force

- Push-in force can be adjusted
- Adjustment via bowden wire and turning knob
- Complete range is adjustable by a 270° turn

Facts:

`Piston rod size:  10 mm`
`Cylinder size:    22 - 28 mm`
`Stroke:           10 - 700 mm`
`Force:            100-600 N`
`Retention force   0-1000 N (Friction — Push in direction)`
`Extended length:  2x stroke + 78 mm (10/22)`

Extended length: 2x stroke + 89 mm (10/28)

Click and go gas spring is a form of lockable gas spring that allows a single touch to the release button and it will fully extend automatically.

- After short touch the gas spring pushes out over the whole stroke
- Lockable only in completely pushed-in condition
- All release systems usable

Facts:

Piston rod size: 8–10 mm
Cylinder size: 28 mm
Stroke: 10–300 mm (08/28),10–700 mm (10/28)
Force: 40–700 N (08/28),50–1300 N (10/28)
Extended length: 2x stroke + 78 mm (08/28)
Extended length: 2x stroke + 87 mm (10/28)

Aluminium gas spring is a standard gas spring with a weight reduction of about 52% when compared to a similar standard gas spring (with 150 mm stroke). Aluminium gas springs are highly corrosion resistant and have high flexural strength.

Facts:

Piston rod size: 8 mm
Cylinder size: 20 mm
Stroke: 10–300 mm
Force: 30–500 N
Extended length: 2x stroke + 49 mm
Progressivity: Approx. 33%
Piston rod: Aluminium hard anodized
Cylinder: Aluminium powder coated
Connecting parts: Aluminium

Telescoping gas spring is a standard gas spring that offers double the stroke at a minimal compressed length. This is due to its ability to telescope out, similar to a telescoping antenna on an automobile. This gas spring is composed of one rod and two cylinders (The smaller of the two cylinders actually acts as a second rod extending in and out of the larger cylinder).

Facts:

Prototype example
Piston rod 1: 8 mm, CeramPro "coated‟ steel
Piston rod 2: 19 mm, CeramPro "coated‟ steel
Cylinder size: 40 mm, powder-coated steel
Compressed length: 480 mm

```
Stroke:              700 mm
Extended length:     1180 mm
Force:               100 N
Progressivity:       100%
```

Gas springs made by different manufacturers may use terminology or materials that differ from those noted here.

Chapter 16

Mainspring

An uncoiled modern watch mainspring.

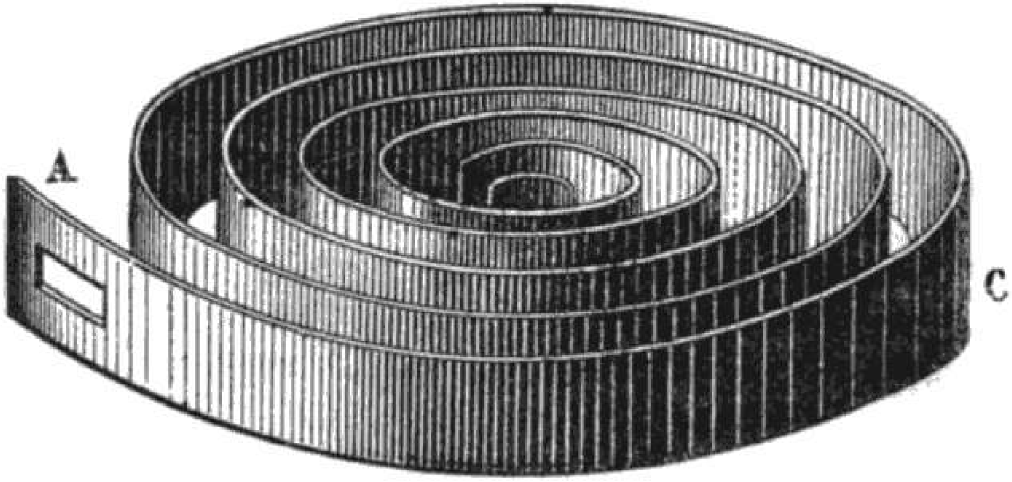

Clock mainspring

A **mainspring** is a spiral torsion spring of metal ribbon that is the power source in mechanical watches and some clocks. *Winding* the timepiece, by turning a knob or key, stores energy in the mainspring by twisting the spiral tighter. The force of the mainspring then turns the clock's wheels as it unwinds, until the next winding is needed. The adjectives **wind-up** and **spring-wound** refer to mechanisms powered by mainsprings, which also include kitchen timers, music boxes, wind-up toys and clockwork radios.

Modern mainsprings

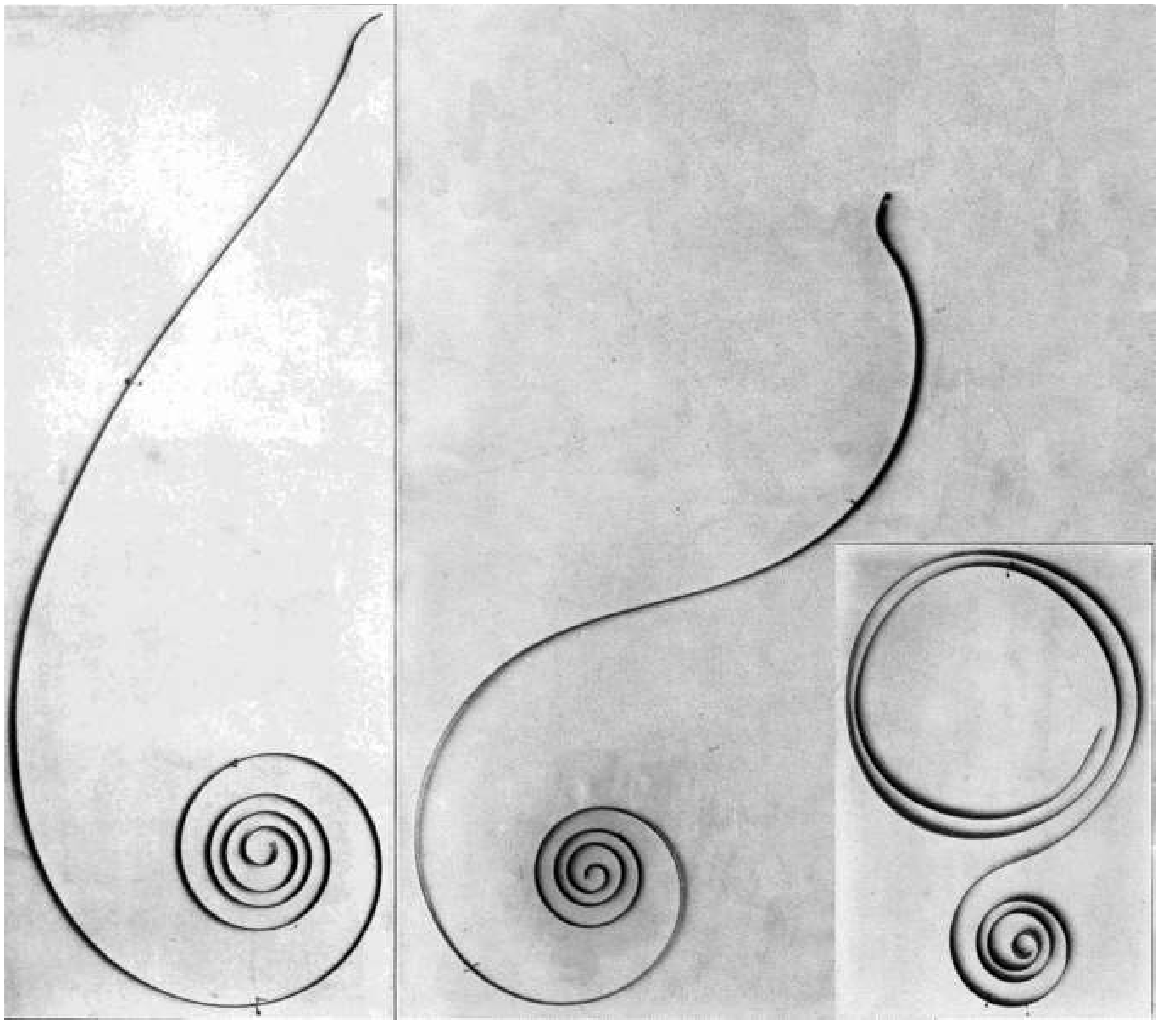

Elgin pocketwatch mainsprings from around 1910, showing (l-r): spiral, semi-reverse, reverse.

A modern watch mainspring is a long strip of hardened and blued steel, or specialised steel alloy, 20-30 centimeters long and 0.05-0.2 millimeters thick. The mainspring in the common 1-day movement is calculated to enable the watch to run for 36 to 40 hours, i.e. with a power-reserve for 12 to 16 hours, which is the normal standard for hand-wound as well as self-winding watches. 8-Day movements provide power for at least 192 hours but use longer mainsprings and bigger barrels. Clock mainsprings are similar, only larger.

Since 1945, carbon steel alloys have been increasingly superseded by newer special alloys (iron, nickel and chromium with the addition of cobalt, molybdenum, or beryllium), and also by cold-rolled alloys ('structural hardening'). Known to watchmakers as 'white metal' springs (as opposed to blued carbon steel), these are stainless and have a higher elastic limit. They are less subject to permanent bending (becoming 'tired') and there is scarcely any risk of their breaking. Some of them are also practically non-magnetic.

In their relaxed form, mainsprings can have three distinct shapes:

- Spiral coiled: i.e. coiled in the same direction throughout, viz. that of a spring inside the barrel
- Semi-reverse: The outer end of the spring is coiled in the reverse direction to form an angle less than 360 degrees.
- Reverse (resilient): the outer end of the spring is coiled in the reverse direction to form an angle exceeding 360 degrees.

The reverse coils provide extra force at the end of the running period, in order to keep the timepiece running at a constant rate to the end.

How they work

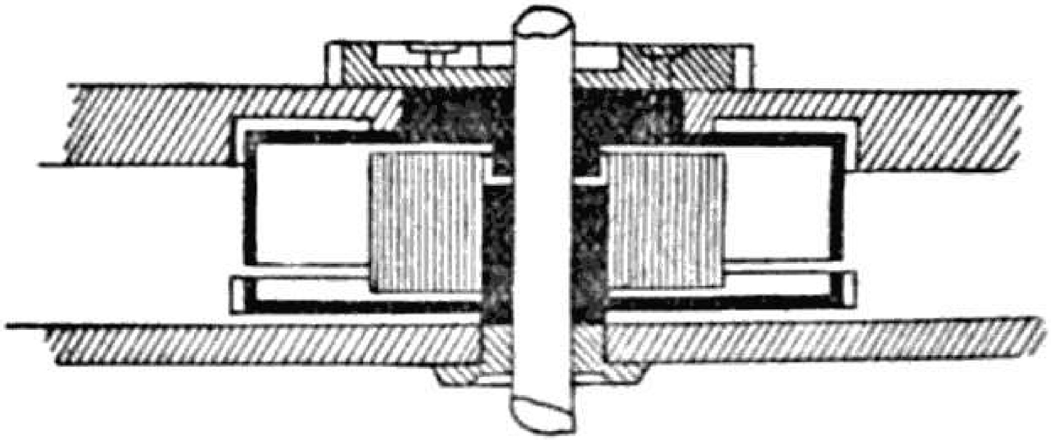

Cross section of a going barrel in a watch (mainspring fully wound).

Going barrel of a watch

The mainspring is coiled around an axle called the arbor, with the inner end hooked to it. In many clocks, the outer end is attached to a stationary post. The spring is wound up by turning the arbor, and after winding its force turns the arbor the other way to run the clock. The disadvantage of this arrangement is that while the mainspring is being wound, its drive force is removed from the clock movement, so the clock may stop. The winding mechanism must always have a ratchet attached, with a pawl (called by clockmakers the *click*) to prevent the spring from unwinding.

In the form used in modern watches, called the *going barrel*, the mainspring is coiled around an arbor and enclosed inside a cylindrical box called the barrel which is free to turn. The spring is attached to the arbor at its inner end, and to the barrel at its outer end. The attachments are small hooks or tabs, which the spring is hooked to by square holes in its ends, so it can be easily replaced.

The mainspring is wound by turning the arbor, but drives the watch movement by the barrel; this arrangement allows the spring to continue powering the watch while it is being wound. Winding the watch turns the arbor, which tightens the mainspring, wrapping it closer around the arbor. The arbor has a ratchet attached to it, with a click to prevent the spring from turning the arbor backward and unwinding. After winding, the arbor is stationary and the pull of the mainspring turns the barrel, which has a ring of gear teeth around it. This meshes with one of the clocks gears, usually the *center wheel* pinion and drives the wheel train. The barrel usually rotates once every 8 hours, so the common 40 hour spring requires 5 turns to unwind completely.

Hazards

The mainspring contains a lot of energy. Clocks and watches have to be disassembled periodically for maintenance and repair, and if precautions are not taken the spring can release suddenly, causing serious injury. Mainsprings are 'let down' gently before servicing, by pulling the click back while holding the winding key, allowing the spring to slowly unwind. However, even in their 'let down' state, mainsprings in barrels contain dangerous residual tension. Watchmakers and clockmakers use a tool called a "mainspring winder" to safely install and remove them. Large mainsprings in clocks are immobilized by "mainspring clamps" before removal.

History

Mainsprings appeared in the first spring powered clocks, in 15th century Europe. Around 1400 coiled springs appeared in locks, and many early clockmakers were also locksmiths. Springs were applied to clocks to make them smaller and more portable than previous weight driven clocks, evolving into the first pocketwatches by 1600. Many sources erroneously credit the invention of the mainspring to the Nürnberg clockmaker Peter Henlein (or Henle, or Hele) around 1511. However, many descriptions from the 15th century of portable clocks 'without weights', and at least two surviving examples, show that spring driven clocks existed by the early years of that century. The oldest surviving clock powered by a mainspring is the *Burgunderuhr* (Burgundy Clock), an ornate, gilt spring driven chamber clock, currently at the Germanisches Nationalmuseum in Nurnberg, whose iconography suggests that it was made around 1430 for Philippe the Good, Duke of Burgundy.

The first mainsprings were made of steel without tempering or hardening processes. They didn't run very long, and had to be wound twice a day. Henlein was noted for making watches that would run 40 hours between windings.

Constant force from a spring

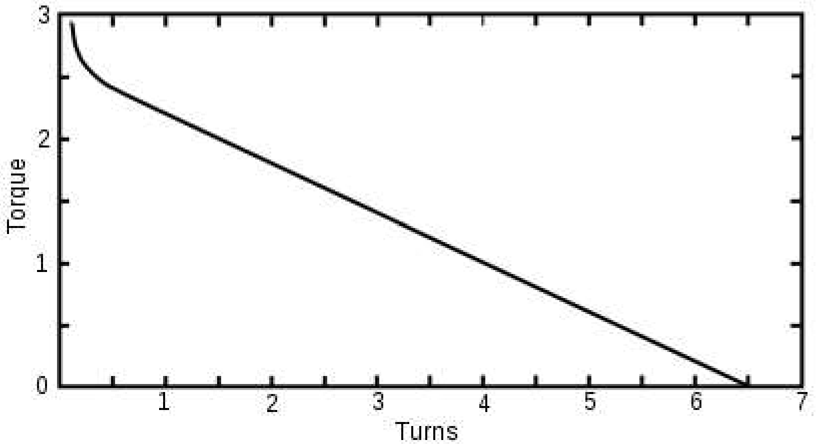

Torque curve of a mainspring. The force it provides decreases linearly as it unwinds.

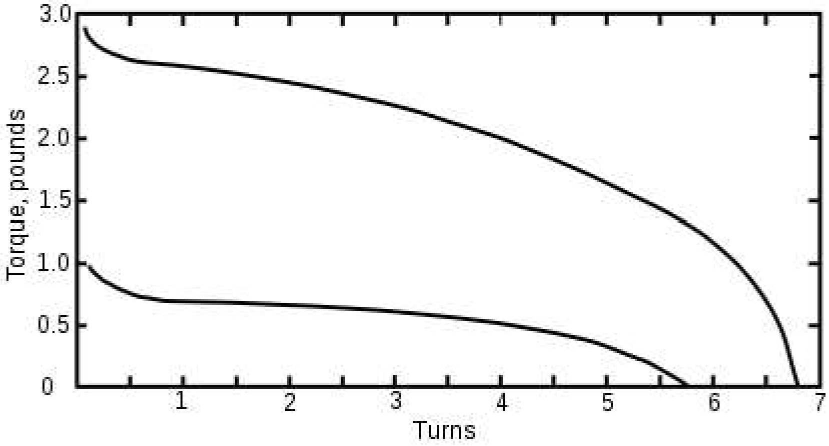

Torque curves of mainsprings in going barrels (1879). The flatter central section provides more constant force during the running period, allowing the clock movement to keep better time.

A problem throughout the history of spring driven clocks and watches is that the force (torque) provided by a spring is not constant, but diminishes as the spring unwinds. Timepieces, however, have to run at a constant rate to keep accurate time. Timekeeping mechanisms are never isochronous; meaning their rate is affected by changes in the drive force. This was especially true of the primitive verge and foliot type used before the advent of the balance spring in 1657. So early clocks slowed down as the mainspring ran down.

Two solutions to this problem appeared in the early spring powered clocks in the 15th century: the *stackfreed* and the *fusee*. The stackfreed was an eccentric cam mounted on the mainspring arbor, with a spring-loaded roller that pressed against it. The cam was shaped so that early in the running period when the mainspring was pushing strongly, the stackfreed would provide an opposing force, while later when the mainspring was almost run down and pushing weakly, it would provide a helping force. The stackfreed added a lot of friction and probably reduced a clock's running time substantially; it was rarely used and was abandoned after about a century.

The fusee was a much longer lasting innovation. This was a cone-shaped pulley that was turned by a chain wrapped around the mainspring barrel. Its curving shape continuously changed the mechanical advantage of the linkage to even out the force of the mainspring as it ran down. Fusees became the standard method of getting constant torque from a mainspring. They were used in most spring driven clocks and watches from their first appearance until the 19th century when the going barrel took over, and in marine chronometers until the 1970s.

Another early device which helped even out the spring's force was *stopwork* or *winding stops*, which prevented the mainspring from being wound up all the way, and prevented it from unwinding all the way. The idea was to use only the central part of the spring's 'torque curve', where its force was more constant. The most common form was the Geneva stop or 'Maltese cross'. Stopwork isn't needed in modern watches.

A fourth device used in a few precision timepieces was the remontoire. This was a small secondary spring or weight which powered the timepiece's escapement, and was itself rewound periodically by the mainspring. This isolated the timekeeping element from the varying mainspring force.

16th century pocketwatch movement with stackfreed (near top).

The modern *going barrel*, invented in 1760 by Jean-Antoine Lépine, produces a constant force by simply using a longer mainspring than needed, and coiling it under tension in the barrel. In operation, only the inner turns of the spring are used. Mathematically, the tension creates a 'flat' section in the spring's 'torque curve' and only this flat section is used. In addition, the outer end of the spring is often given a 'reverse' curve, so it has an 'S' shape. This stores more tension in the spring's outer turns where it is available toward the end of the running period. The result is that the barrel provides approximately constant torque over the watch's designed running period; the torque doesn't decline until the mainspring has almost run down.

The built-in tension of the spring in the going barrel makes it hazardous to disassemble even when not wound up.

Broken mainsprings

Because they are subjected to constant stress cycles, up until the 1960s mainsprings generally broke from metal fatigue long before other parts of the timepiece. They were considered expendable items. This often happened at the end of the winding process, when the spring is wound as tightly as possible around the arbor, with no space between the coils. When manually winding, it is easy to reach this point unexpectedly and put excessive pressure on the spring. Broken mainsprings were the largest cause of watch repairs until the 1960s. Since then, the improvements in spring metallurgy mentioned above have made broken mainsprings rare.

Even if the spring didn't break, too much force caused another problem. Since no more slack was left in the spring, the pressure of the last turn of the winding knob put the spring under excessive tension, which was locked in by the last click of the ratchet. So the watch ran with excessive drive force for several hours, until the extra tension in the end of the spring was relieved. This caused the balance wheel to rotate too far and 'knock', and the watch to gain time. In older watches this was prevented with 'stopwork'. In modern watches this is prevented by designing the 'click' with some 'recoil' (backlash), to allow the arbor to rotate backward after winding by about two ratchet teeth, enough to remove excess tension.

Motor or safety barrel

Around 1900, when broken watchsprings were more of a problem, some pocketwatches used a variation of the going barrel called the *motor barrel* or *safety barrel*. Mainsprings usually broke at their attachment to the arbor, where bending stresses are greatest. When the mainspring broke, the outer part recoiled and the momentum spun the barrel in the reverse direction. This applied great force to the delicate wheel train and escapement, often breaking pivots and jewels.

In the motor barrel, the functions of the arbor and barrel were reversed from the going barrel. The mainspring was wound by the barrel, and turned the arbor to drive the wheel train. Thus if the mainspring broke, the destructive recoil of the barrel would be applied not to the wheel train but to the winding mechanism, which was robust enough to take it.

Safety pinion

A *safety pinion* was an alternate means of protection, used with the going barrel. In this, the center wheel pinion, which the barrel gear engages, was attached to its shaft with a reverse screw thread. If the spring broke, the reverse recoil of the barrel, instead of being passed on to the gear train, would simply unscrew the pinion.

The myth of 'overwinding'

Watches are often found stopped with the mainspring fully wound, which led to a myth that winding a watch all the way up damages it. What actually happens is that as time passes and the watch movement collects dirt and the oil dries up, friction increases, so that the mainspring doesn't have the force to turn the watch until the end of its running period. If the owner continues to wind and use the watch, eventually the friction force reaches the 'flat' part of the torque curve, and quickly a point is reached where the mainspring doesn't have the force to run the watch even at full wind, so the watch stops with the mainspring fully wound. The watch needs service, but the problem is caused by a dirty movement or other defect, not 'overwinding'.

Self-winding watches and 'unbreakable' mainsprings

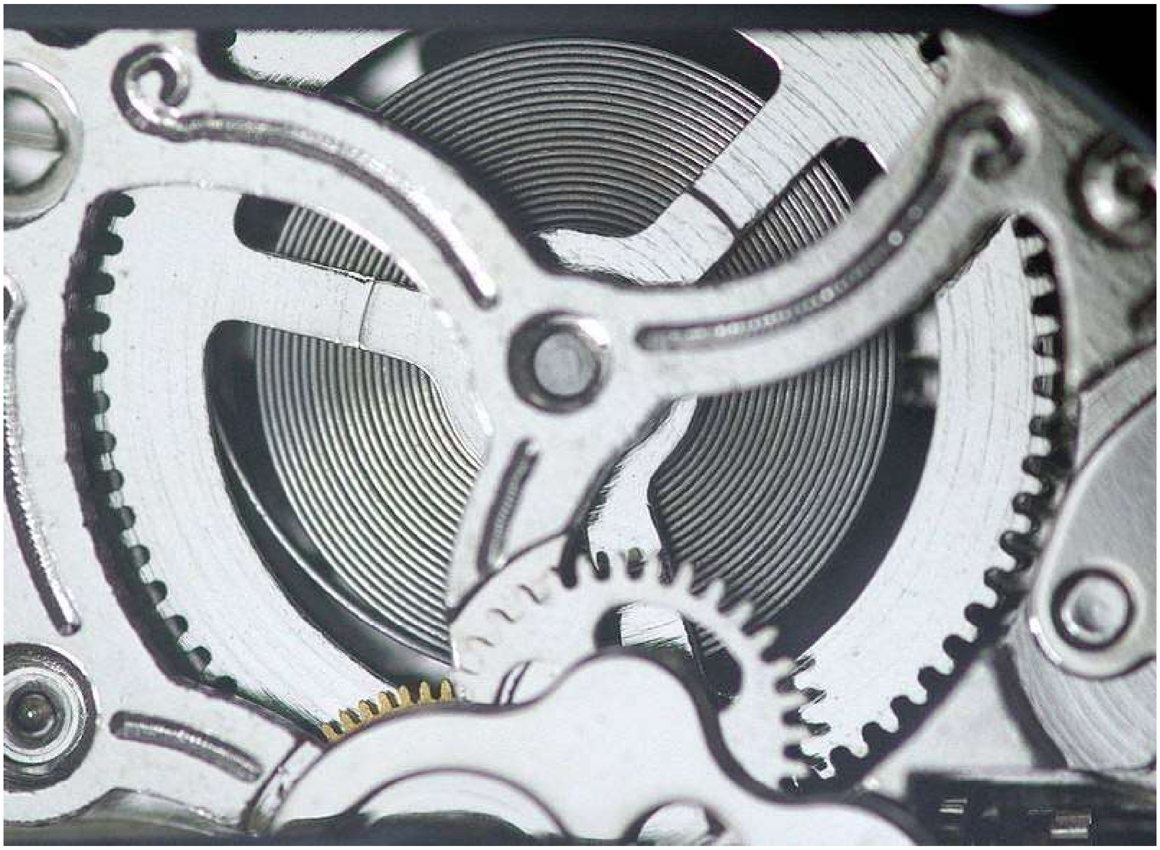

The mainspring of an automatic watch. The spring isn't firmly mounted on the left side, and will slip when fully wound.

Self-winding or automatic watches, introduced widely in the 1950s, use the natural motions of the wrist to keep the mainspring wound. A semicircular weight, pivoted at the center of the watch, rotates with each wrist motion. A winder mechanism uses rotations in both directions to wind the mainspring.

In automatic watches, motion of the wrist could continue winding the mainspring until it broke. This is prevented with a slipping clutch device. The outer end of the mainspring, instead of attaching to the barrel, is attached to a circular expansion spring called the *bridle* that presses against the inner wall of the barrel, which has serrations or notches to hold it. During normal winding the bridle holds by friction to the barrel, allowing the mainspring to wind. When the mainspring reaches its full tension, its pull is stronger than the bridle. Further rotation of the arbor causes the bridle to slip along the barrel, preventing further winding. In watch company terminology, this is often misleadingly referred to as an 'unbreakable mainspring'.

'Tired' or 'set' mainsprings

After decades of use, mainsprings in older timepieces are found to deform slightly and lose some of their force, becoming 'tired' or 'set'. This condition is mostly found in springs in barrels. It causes the running time between windings to decrease. During servicing the mainspring should be checked for 'tiredness' and replaced if necessary. The British Horological Institute suggests these tests:

- In a mainspring barrel, when unwound and relaxed, most of a healthy spring's turns should be pressed flat against the wall of the barrel, with only 1 or 2 turns spiralling across the central space to attach to the arbor. If more than 2 turns are loose in the center, the spring may be 'tired'; with 4 or 5 turns it definitely is 'tired'.
- When removed from the barrel, if the diameter of the relaxed spring lying on a flat surface is less than 2½ times the barrel diameter, it is 'tired'.

Power reserve indicator

The power reserve is at the 6 position on this automatic watch. Here it is indicating that 25 out of 40 hours remain

Some high grade watches have an extra dial on the face indicating how much power is left in the mainspring, often graduated in hours the watch has left to run. Since both the arbor and the barrel turn, this mechanism requires a differential gear that measures how far the arbor has been turned, compared to the barrel.

Unusual forms of mainspring

A mainspring is usually a coiled metal spring, however there are exceptions:

- The wagon spring clock: During a brief time in American clockmaking history coilable spring steel was not available in the USA and inventive clockmakers built clocks powered by a stack of leafsprings, similar what has traditionally served as a suspension spring for wagons.
- Other spring types are conceivable and have been used occasionally on experimental timepieces, such as e.g. torsion springs.
- Occasionally one finds an odd clock with a spring made of material other than metal, such as e.g. synthetic elastic materials.

Chapter 17

Torsion Spring

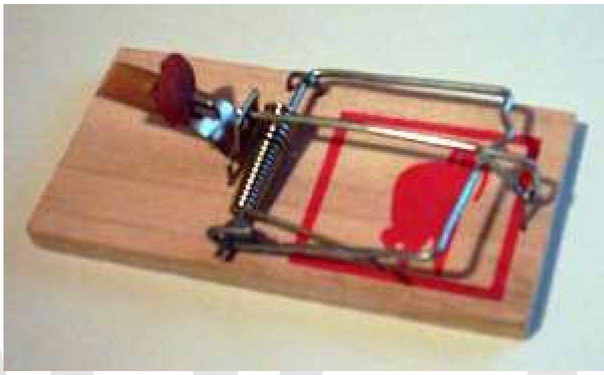

A mousetrap powered by a helical torsion spring

A **torsion spring** is a spring that works by torsion or twisting; that is, a flexible elastic object that stores mechanical energy when it is twisted. The amount of force (actually torque) it exerts is proportional to the amount it is twisted. There are two types. A **torsion bar** is a straight bar of metal or rubber that is subjected to twisting (shear stress) about its axis by torque applied at its ends. A more delicate form used in sensitive instruments, called a **torsion fiber** consists of a fiber of silk, glass, or quartz under tension, that is twisted about its axis. The other type, a **helical torsion spring**, is a metal rod or wire in the shape of a helix (coil) that is subjected to twisting about the axis of the coil by sideways forces (bending moments) applied to its ends, twisting the coil tighter. This terminology can be confusing because in a helical torsion spring the forces acting on the wire are actually bending stresses, not torsional (shear) stresses.

Torsion coefficient

As long as they are not twisted beyond their elastic limit, torsion springs obey an angular form of Hooke's law:

$$\tau = -\kappa\theta$$

where τ is the torque exerted by the spring in newton-meters, and θ is the angle of twist from its equilibrium position in radians. κ is a constant with units of newton-meters / radian, variously called the spring's **torsion coefficient**, **torsion elastic modulus**, **rate**, or just **spring constant**, equal to the torque required to twist the spring through an angle of 1 radian. It is analogous to the spring constant of a linear spring.

The energy *U*, in joules, stored in a torsion spring is:

$$U = \frac{1}{2}\kappa\theta^2$$

Uses

Some familiar examples of uses are the strong helical torsion springs that operate clothespins and traditional springloaded-bar type mousetraps. Other uses are in the large coiled torsion springs used to counter-balance the weight of garage doors, and a similar system is used to assist in opening the trunk (boot) cover on some sedans. Small coiled torsion springs are often used to operate pop-up doors found on small consumer goods like digital cameras and compact disc players. Other more specific uses:

- *Torsion bar suspension* has been used in vehicle suspension at least from the time of the 1934 Citroen Traction Avant. The Volkswagen Beetle and Porsche 911 are probably the most famous examples, but it has also been the dominant heavy armored vehicle suspension since World War II, and is now common in SUVs.

- The *sway bar* used in many vehicle suspension systems also uses the torsion spring principle.

- The *torsion pendulum* used in torsion pendulum clocks is a wheel-shaped weight suspended from its center by a wire torsion spring. The weight rotates about the axis of the spring, twisting it, instead of swinging like an ordinary pendulum. The force of the spring reverses the direction of rotation, so the wheel oscillates back and forth, driven at the top by the clock's gears.

- The *torsion catapult* or mangonel is a medieval siege engine invented by the ancient Greeks. It uses a torsion spring consisting of twisted ropes to swing an arm that throws a heavy missile at the enemy with great force.

- The *balance spring* or hairspring in mechanical watches is a fine spiral-shaped torsion spring that pushes the balance wheel back toward its center position as it rotates back and forth. The balance wheel and spring function similarly to the torsion pendulum above in keeping time for the watch.

- The *D'Arsonval movement* used in mechanical pointer-type meters to measure electrical current is a type of torsion balance. A coil of wire attached to the pointer twists in a magnetic field against the resistance of a torsion spring. Hooke's law ensures that the angle of the pointer is proportional to the current.

- A *DMD* or digital micromirror device chip is at the heart of many video projectors. It uses hundreds of thousands of tiny mirrors on tiny torsion springs fabricated on a silicon surface to reflect light onto the screen, forming the image.

Torsion balance

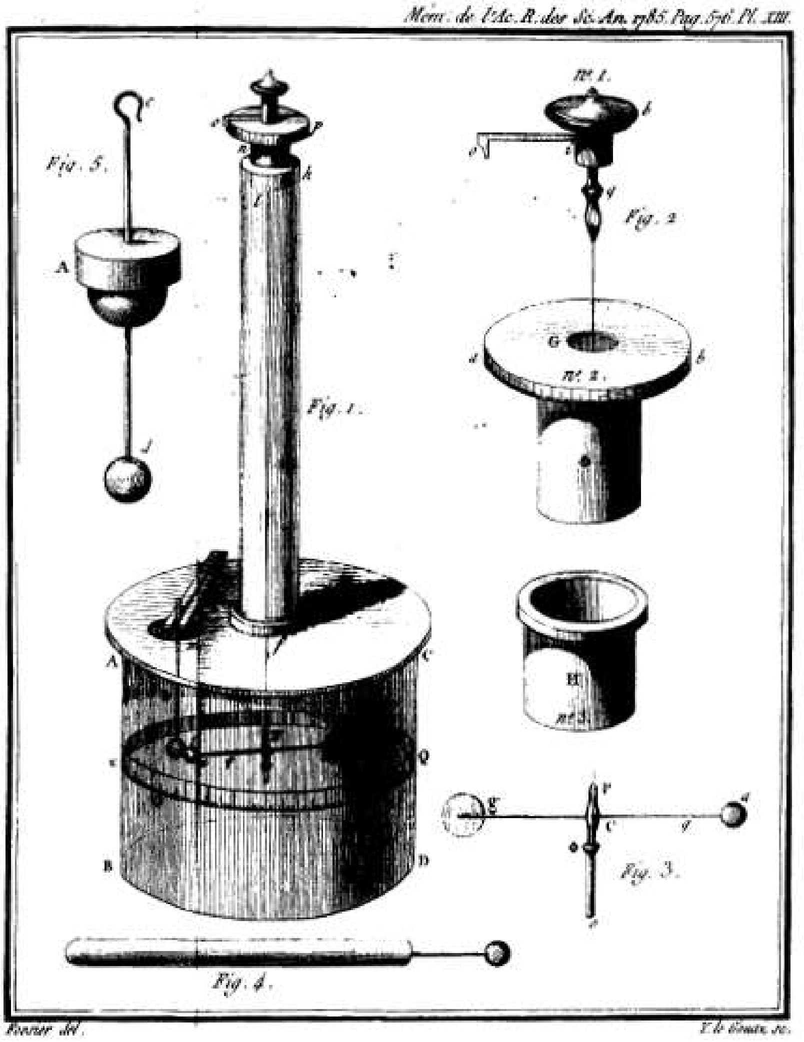

Drawing of Coulomb's torsion balance. From Plate 13 of his 1785 memoir.

The **torsion balance**, also called **torsion pendulum**, is a scientific apparatus for measuring very weak forces, usually credited to Charles-Augustin de Coulomb, who invented it in 1777, but independently invented by John Michell sometime before 1783. Its most well-known uses were by Coulomb to measure the electrostatic force between charges to establish Coulomb's Law, and by Henry Cavendish in 1798 in the Cavendish experiment to measure the gravitational force between two masses to calculate the density of the Earth, leading later to a value for the gravitational constant.

The torsion balance consists of a bar suspended from its middle by a thin fiber. The fiber acts as a very weak torsion spring. If an unknown force is applied at right angles to the ends of the bar, the bar will rotate, twisting the fiber, until it reaches an equilibrium where the twisting force or torque of the fiber balances the applied force. Then the magnitude of the force is proportional to the angle of the bar. The sensitivity of the instrument comes from the weak spring constant of the fiber, so a very weak force causes a large rotation of the bar.

In Coulomb's experiment, the torsion balance was an insulating rod with a metal-coated ball attached to one end, suspended by a silk thread. The ball was charged with a known charge of static electricity, and a second charged ball of the same polarity was brought near it. The two charged balls repelled one another, twisting the fiber through a certain angle, which could be read from a scale on the instrument. By knowing how much force it took to twist the fiber through a given angle, Coulomb was able to calculate the force between the balls. Determining the force for different charges and different separations between the balls, he showed that it followed Coulomb's law.

To measure the unknown force, the spring constant of the torsion fiber must first be known. This is difficult to measure directly because of the smallness of the force. Cavendish accomplished this by a method widely used since: measuring the resonant vibration period of the balance. If the free balance is twisted and released, it will oscillate slowly clockwise and counterclockwise as a harmonic oscillator, at a frequency that depends on the moment of inertia of the beam and the elasticity of the fiber. Since the inertia of the beam can be found from its mass, the spring constant can be calculated.

Coulomb first developed the theory of torsion fibers and the torsion balance in his 1785 memoir, *Recherches theoriques et experimentales sur la force de torsion et sur l'elasticite des fils de metal &c*. This led to its use in other scientific instruments, such as galvanometers, and the Nichols radiometer which measured the radiation pressure of light. In the early 1900s gravitational torsion balances were used in petroleum prospecting. Today torsion balances are still used in physics experiments. In 1987, gravity researcher A.H. Cook wrote:

The most important advance in experiments on gravitation and other delicate measurements was the introduction of the torsion balance by Michell and its use by Cavendish. It has been the basis of all the most significant experiments on gravitation ever since.

Torsional harmonic oscillators

For definition of terms see end of section

Torsion balances, torsion pendulums and balance wheels are examples of torsional harmonic oscillators that can oscillate with a rotational motion about the axis of the torsion spring, clockwise and counterclockwise, in harmonic motion. Their behavior is analogous to translational spring-mass oscillators. The general equation of motion is:

$$I\frac{d^2\theta}{dt^2} + C\frac{d\theta}{dt} + \kappa\theta = \tau(t)$$

If the damping is small, $C \ll \sqrt{\kappa I}$, as is the case with torsion pendulums and balance wheels, the frequency of vibration is very near the natural resonance frequency of the system:

$$f_n = \frac{\omega_n}{2\pi} = \frac{1}{2\pi}\sqrt{\kappa/I}$$

The general solution in the case of no drive force ($\tau = 0$), called the transient solution, is:

$$\theta = Ae^{-\alpha t}\cos(\omega t + \phi)$$

where:

$$\alpha = C/2I$$
$$\omega = \sqrt{\omega_n^2 - \alpha^2} = \sqrt{\kappa/I - (C/2I)^2}$$

Applications

The balance wheel of a mechanical watch is a harmonic oscillator whose resonance frequency f_n sets the rate of the watch. The resonance frequency is regulated, first coarsely by adjusting I with weight screws set radially into the rim of the wheel, and then more finely by adjusting κ with a regulating lever that changes the length of the balance spring.

In a torsion balance the drive torque is constant and equal to the unknown force to be measured F, times the moment arm of the balance beam L, so $\tau(t) = FL$. When the oscillatory motion of the balance dies out, the deflection will be proportional to the force:

$$\theta = FL/\kappa$$

To determine F it is necessary to find the torsion spring constant κ. If the damping is low, this can be obtained by measuring the natural resonance frequency of the balance, since the moment of inertia of the balance can usually be calculated from its geometry, so:

$$\kappa = (2\pi f_n)^2 I$$

In measuring instruments, such as the D'Arsonval ammeter movement, it is often desired that the oscillatory motion die out quickly so the steady state result can be read off. This is accomplished by adding damping to the system, often by attaching a vane that rotates in a fluid such as air or water (this is why magnetic compasses are filled with fluid). The value of damping that causes the oscillatory motion to settle quickest is called the critical damping C_c:

$$C_c = 2\sqrt{\kappa I}$$

Definition of terms

Term	**Unit**	**Definition**
θ	radians	Angle of deflection from rest position
I	$\mathrm{kg\,m^2}$	Moment of inertia
C	$\mathrm{kg\,m^2\,s^{-1}\,rad^{-1}}$	Rotational friction (damping)
κ	$\mathrm{N\,m\,rad^{-1}}$	Coefficient of torsion spring
τ	$\mathrm{N\,m}$	Drive torque
f_n	Hz	Undamped (or natural) resonance frequency
ω_n	$\mathrm{rad\,s^{-1}}$	Undamped resonance frequency in radians
f	Hz	Damped resonance frequency
ω	$\mathrm{rad\,s^{-1}}$	Damped resonance frequency in radians
α	$\mathrm{s^{-1}}$	Reciprocal of damping time constant
ϕ	rad	Phase angle of oscillation
L	m	Distance from axis to where force is applied

Chapter 18

Corvette Leaf Spring

Since 1963, transverse **leaf springs** have been an integral part of the suspension of **GM'**s **Chevrolet Corvette**.

Traditional use of leaf springs

A traditional leaf spring arrangement.

A leaf spring is a long, flat, thin, and flexible piece of spring steel or composite material that resists bending. The basic principles of leaf spring design and assembly are relatively simple, and leafs have been used in various capacities since medieval times. Most heavy duty vehicles today use two sets of leaf springs per solid axle, mounted perpendicularly to support the weight of the vehicle. This Hotchkiss system requires that each leaf set act as both a spring and a horizontally stable link. Because leaf sets lack rigidity, such a dual-role is only suited for applications where load-bearing capability is more important than precision in suspension response.

Leaf springs on the Corvette

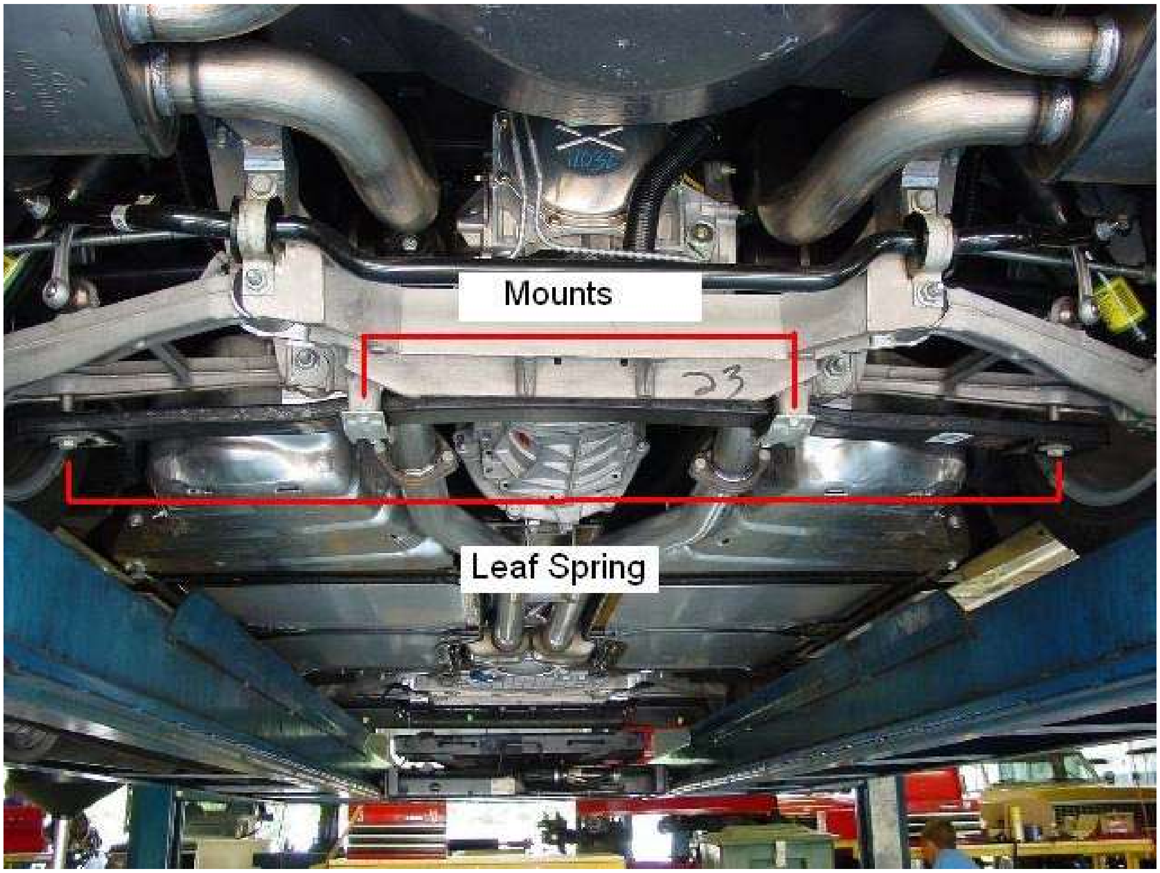

The C5 Corvette's rear suspension.

All six generations of the Corvette have used leaf springs in some capacity. The basic arrangement for each generation is listed as follows:

- C1 (1953–1962):

  Front: Independent unequal-length double wishbones with coil springs.
  Rear: Rigid axle supported by leaf springs and longitudinal control links.

- C2 (1963–1967), C3 (1968–1982):

  Front: Independent unequal-length double wishbones with coil springs.
  Rear: Independent suspension with trailing and lateral links supported by a centrally mounted leaf spring.

- C4 (1984–1996):

  Front: Independent unequal-length double wishbones with transverse fiberglass mono-leaf spring mounted to allow for anti-roll effect.
  Rear: Independent suspension with trailing and lateral links supported by a centrally mounted fiberglass mono-leaf spring.

- C5 (1997–2004), C6 (2005–):

  Front: Independent unequal-length double wishbones with transverse fiberglass mono-leaf spring mounted to allow for anti-roll effect.
  Rear: Independent unequal length double wishbones with transverse fiberglass mono-leaf spring mounted to allow for anti-roll effect.

In the C2 and subsequent generations, a leaf spring is mounted transversely in the chassis and used in conjunction with several independent suspension designs. Common to these post-C1 Corvettes, the leaf acts only as a spring, and not a suspension arm or a link. Because it is not required to stabilize the wheels, the leaf functions in much the same manner as a coil spring. This configuration obviates the drawbacks and imprecision associated with leaf springs in a traditional Hotchkiss suspension layout.

Motion of a transverse leaf spring

The following images show the movements of an independent suspension using a transverse leaf spring. For all images:

- The suspension arms are green
- The chassis is blue
- The uprights are gray
- Leaf springs are dark gray
- Pivot links connecting the ends of the springs to the suspension arms are red

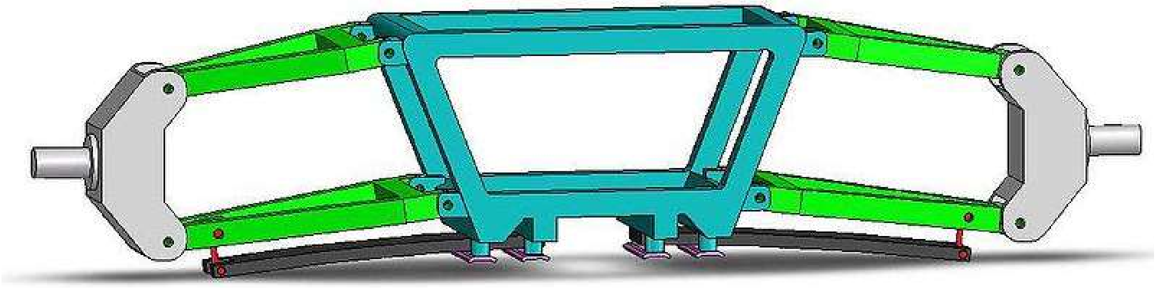

1 - A transverse leaf spring suspension at rest, with separate right and left springs.

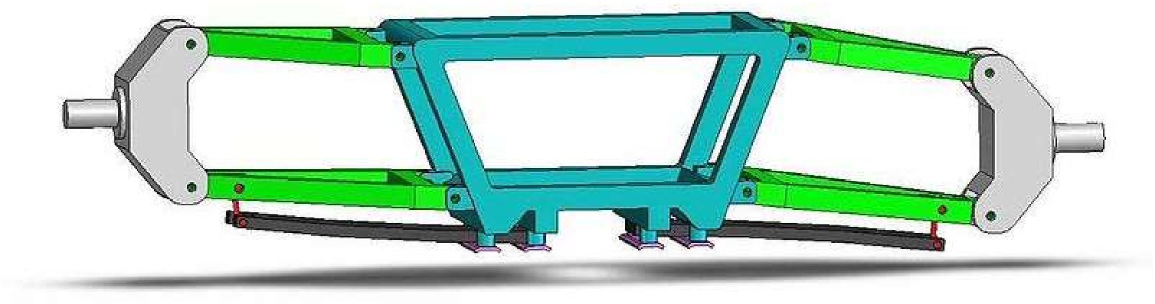

2 - The same split-spring configuration with the left wheel in compression.

Illustrations #1 and #2 show independent left and right leaf springs mounted rigidly to a chassis. In the first illustration, the suspension is at rest. As a left wheel moves up in the second illustration, the left spring flexes upward, but the right spring remains unaffected. Because the two springs are not connected, the movement of one wheel has no effect on the spring rate of the opposite wheel. While the C2, C3, and C4 Corvettes used a continuous spring instead of the split spring of the illustration, left and right spring rates remained independent because the spring was rigidly mounted at its center to the chassis.

3 - A single transverse leaf spring suspension similar to that used on the C5 and C6 Corvette.

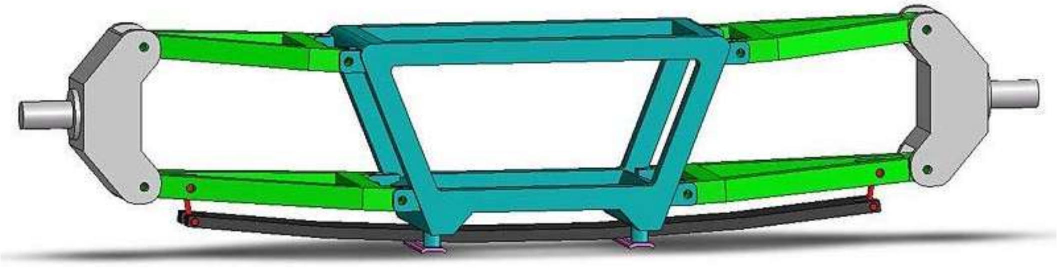

4 - The same single-leaf suspension with both wheels compressed upward.

Illustrations #3 and #4 show an independent suspension with a single transverse leaf spring, an arrangement similar to that used on the C5 and C6 Corvettes and the front of the C4 Corvette. While at rest in illustration #3, the leaf forms a symmetric arc between the left and right sides of the suspension with equal force applied to each. Under the compression of both wheels in illustration #4, the widely-spaced chassis mounts allow the spring to pivot; the ends of the spring flex upward and the center moves down. Spring force remains even between both sides.

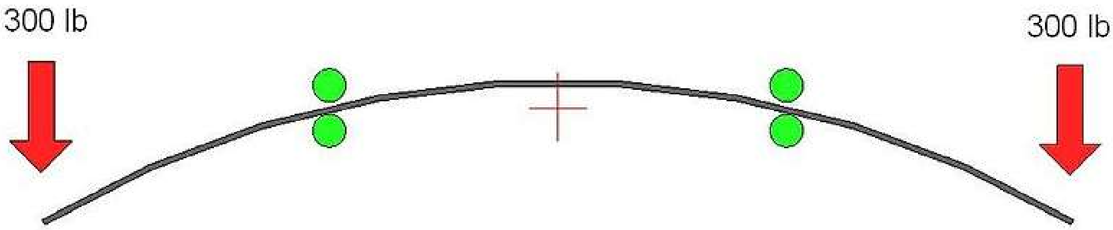

At static ride height the leaf spring applies the same 300lb to each side of the suspension.

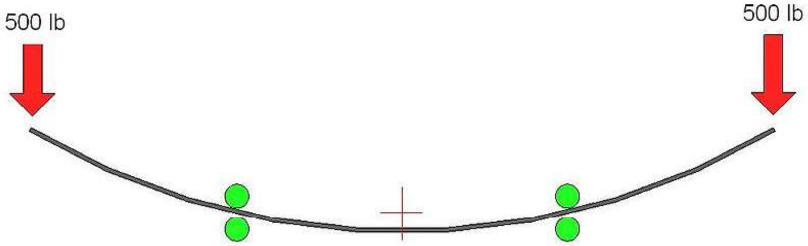

In compression the spring force has increased to 500lb but is still even between both sides

The leaf spring as an anti-roll bar

The extent to which a leaf spring acts as an anti-roll bar bar is determined by the way it is mounted. A single, loose center mount would cause the spring to pivot about the center axis, pushing one wheel down as the other was compressed upward. This is exactly opposite of an anti-roll bar and has not been used on any generation of the Corvette.

A single, perfectly rigid center mount that held a small center section of the spring flat against the frame would isolate one side of the spring from the other. No roll or anti-roll effect would appear. The rear spring of the C2, C3, and C4 has this type of mount, which effectively divides the spring in two. It becomes a quarter-elliptic spring.

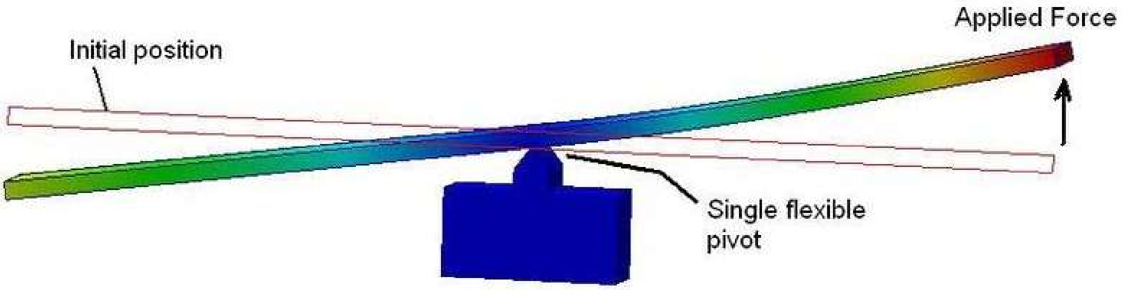

A single transverse spring with a flexible center mount. When one side is pushed up the other side moves down.

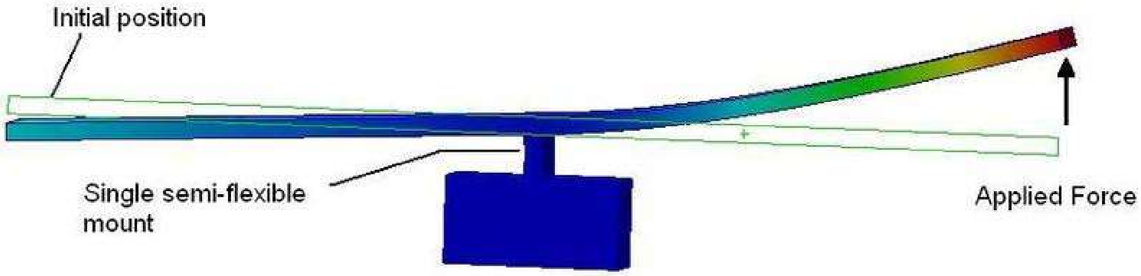

A transverse leaf spring with a semi-rigid mount. When one side is pushed up the other side moves down significantly less than in the flexible mount case.

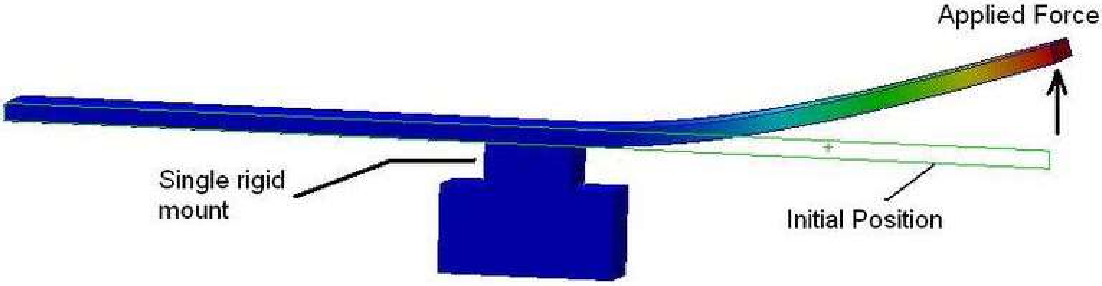

A transverse leaf spring with a central rigid mount. The two spring halves are effectively isolated. Movements of one half of the spring do not affect the other half.

Beginning with the C4 model, the Corvette has had widely-spaced double mounts on the front. The rear spring has had double mounts since the C5. The spring is allowed to pivot about these two points. When only one wheel is compressed as in illustration #5, the portion of the spring between the mounts assumes a horizontal "S" shape. An impact that compresses the left wheel will tighten the bend radius of the right half of the spring, thereby lowering the spring rate for the right wheel like an anti-roll bar. The caster, camber, toe-in, and general orientation of the left wheel remain unchanged.

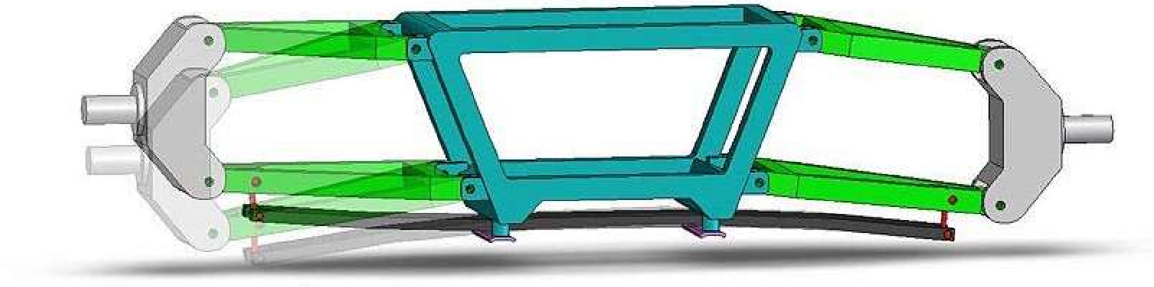

5 - The single-leaf suspension with the left side in compression.

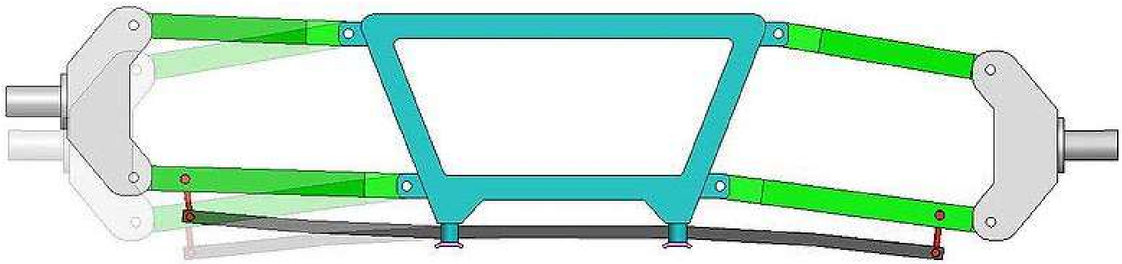

5a - The same suspension in rear profile.

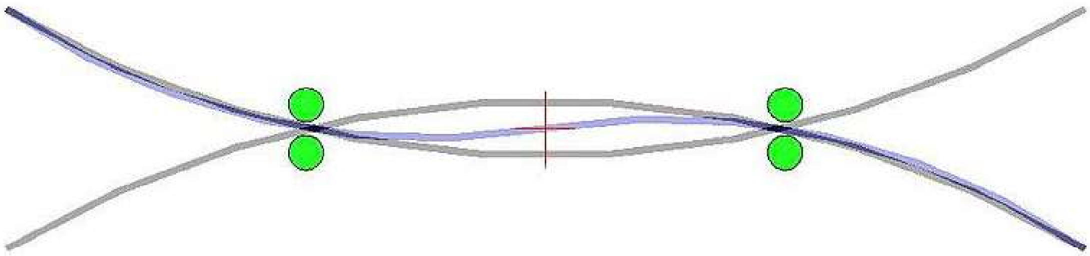

This multi exposure image shows an exaggerated view of the leaf spring flex when the wheels are compressed, in droop and in roll. The S-bent spring is shown in blue.

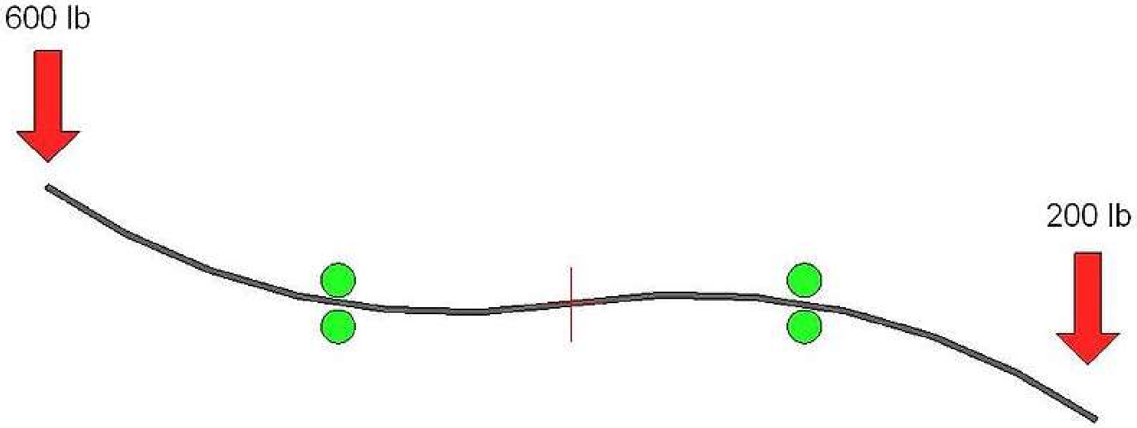

Left side shown in compression, right side shown at static height. The left side spring force has increased from 500lbs to 600lbs while the right side has decreased from 300lb to 200lb.

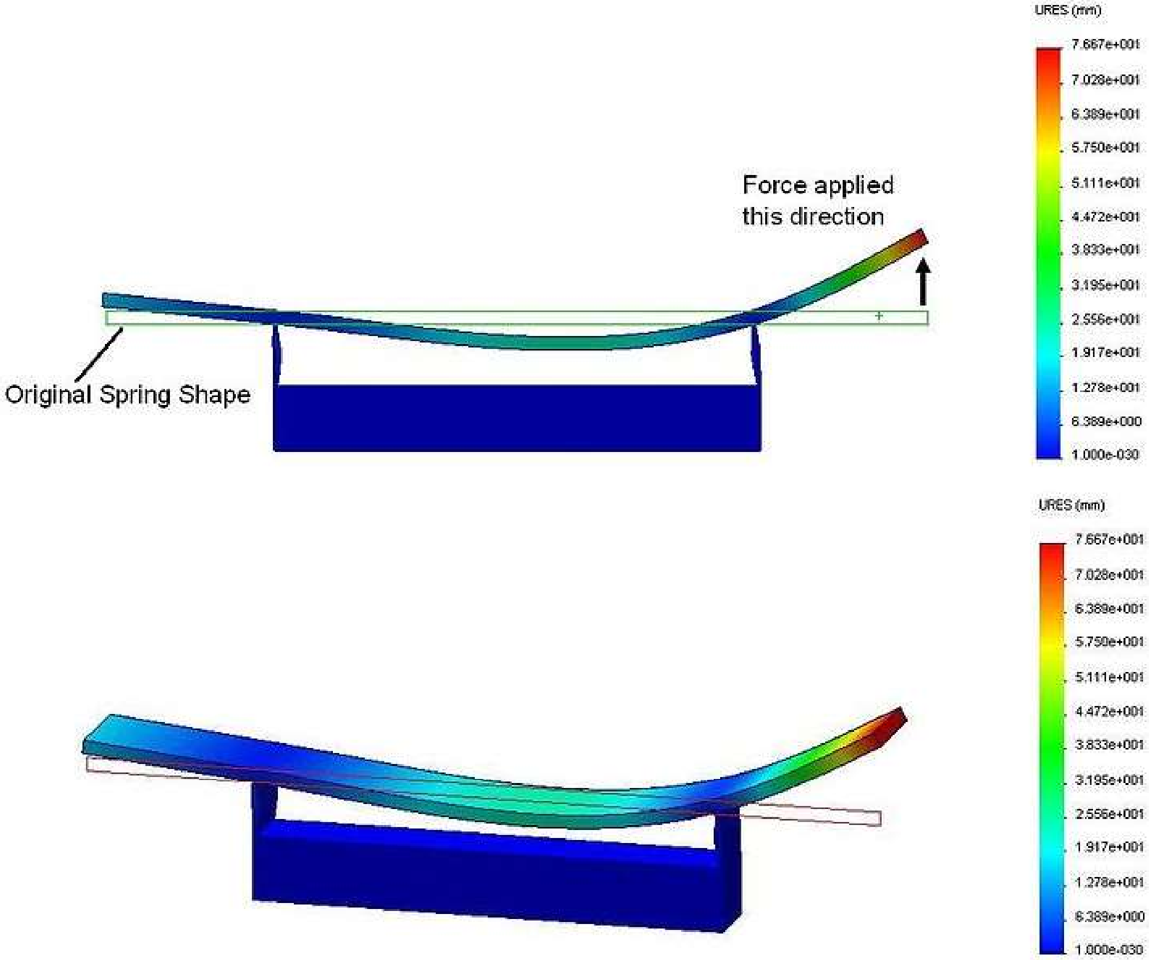

Approximate FEA model of a leaf spring under load. The initial, unbent shape of the spring is shown as a silhouette box. An upward deflection on the right side of the spring results in a smaller upward movement on the left side.

With the Corvette's suspension configuration, the effects of the anti-roll bar and leaf spring add together at the wheels. This additive property allows Corvette engineers to use a smaller, lighter anti-roll bar than the car would otherwise require if it used conventional coil springs. From Dave McLellan, chief engineer on the C4 Corvette program:

We planned to use a massive front *[roll]* bar to achieve the roll stiffness we were after. We found, however, that by spreading the body attachment of the front suspension fiberglass spring into two separate attachments 18 inches apart, we could achieve a major portion of the roll stiffness contribution of the front roll bar for free. We still used a massive front bar, but it would have been even bigger and heavier if it had not been supplemented by the leaf spring.

Transverse leaf springs within independent suspensions

Advantages

- Less unsprung weight. Coil springs contribute to unsprung weight; the less there is, the more quickly the wheel can respond at a given spring rate.
- Less weight. The C4 Corvette's composite front leaf weighed 1/3 as much as the pair of conventional coil springs it would replace. Volvo reported that the single composite leaf spring used in the rear suspension of the 960 Wagon had the same mass as just one of the two springs it replaced.
- Weight is positioned lower. Coil springs and the associated chassis hard mounts raise the center of mass of the car.
- Superior wear characteristics. The Corvette's composite leaf springs last longer than coils, though in a car as light as the Corvette, the difference is not especially significant. No composite Corvette leaf has ever been replaced due to fatigue failure, though steel leafs from 1963 to 1983 have been. As of 1980, the composite spring was an option on the C3.
- As used on the Corvette, ride height can be adjusted by changing the length of the end links connecting the leaf to the suspension arms. This allows small changes in ride height with minimal effects on the spring rate.
- Also as used on the C4 front suspension, C5, and C6 Corvettes, the leaf spring acts as an anti-roll bar, allowing for smaller and lighter bars than if the car were equipped with coil springs. As implemented on the C3 and C4 rear suspensions with a rigid central mount, the anti-roll effect does not occur.
- Packaging. As used on the C5 and later Corvettes the use of OEM coil over damper springs would have forced the chassis engineers to either vertically raise the shock towers or move them inward. In the rear this would have reduced trunk space. In the front this would have interfered with engine packaging. The use of the leaf spring allowed the spring to be placed out of the way under the chassis and while keeping the diameter of the shock absorber assembly to that of just the damper rather than damper and spring.

Disadvantages

- Packaging can be problematic; the leaf must span from one side of the car to the other. This can limit applications where the drivetrain, or another part, is in the way.
- Materials expense. Steel coils are commodity items; a single composite leaf spring costs more than two of them.
- Design complexity. Composite monoleafs allow for considerable variety in shape, thickness, and materials. They are inherently more expensive to design, particularly in performance applications.
- Cost of modification. As a result of specialized design and packaging, changing spring rates often requires a custom unit. Coil springs in various sizes and rates are available inexpensively.

- Susceptibility to damage. Engine fluids and exhaust modifications like cat-back removal might weaken or destroy composite springs over time. The leaf spring is more susceptible to heat related damage than conventional steel springs.
- Perception. Due to its association with spring-located solid axles, the leaf spring has a stigma unrelated to the spring itself.

Racing concerns

- Running stiffer springs left-to-right would require either asymmetrical spring mounts or an asymmetric spring. However, a few companies such as VBP offer kits that allow independent adjustment of spring rate and ride height at all four corners of the car.
- Regulations often prohibit the use of leaf springs; NASCAR does not allow them.
- The more compact shape of a coil spring can allow for variation in more suspension design and spring placement. Because a transverse leaf spring must span the width of the car, open-wheel cars are too low to use them. The leaf spring would have to pass through the gearbox or the driver's legs.
- Coil springs are not car-specific. A Porsche, an LMP, and a Ferrari can all use a spring custom wound on the same generic equipment. Custom composite leaf springs require expensive retooling and cannot be used across car models.
- The characteristics of coil springs in a performance environment are known, and racers will use what they know. Most race teams do not have adequate experience with leaf springs to use them in this capacity.

Carroll Smith is quoted in his book, *Engineer to Win*

If I were involved in the design of a new passenger vehicle, however, I would give serious consideration to the use of a transverse composite single leaf spring of unidirectional glass or carbon filament in an epoxy matrix. This would be the lightest practical spring configuration and, although space constraints would seem to limit its use in racing, it should be perfectly feasible on road-going vehicles, from large trucks to small commuter cars. (Since I wrote this paragraph the new-generation Corvette has come out with just such a spring to control its independent suspension systems-at both end of the car.)

Transverse leaf springs in other vehicles

In addition to the Corvette, a composite transverse leaf spring has been used on other GM and non-GM vehicles.

- Volvo 960 (Wagon only)
- Volvo S90
- Mercedes Sprinter vans (transverse in front only)
- VW 1-Litre-Car prototype car
- GM W platform cars- (Lumina, Grand Prix, Regal, Cutlass Supreme).
- GM E platform cars- (Eldorado, Toronado, Riviera, Reatta, Allante).
- Mercedes Smart ForTwo (used with MacPherson Struts)

- Indigo, a Swedish made, low volume roadster. Due to the anti-roll properties of the transverse leaf spring setup the car does not use a separate front anti-roll bar.

Many small European cars such as the Fiat 128, the Yugo, and the Triumph Motor Company small chassis cars (Herald, Vitesse, Spitfire, GT6) used transverse steel springs in similar fashion. The Yugo's steel spring used twin attachment points and did provide anti-roll capability.

Recent patents and research utilizing dual pivotally supported composite leaf springs

In addition to the vehicles mentioned above, several automotive companies have researched suspension designs using a transverse composite leaf spring supported in a fashion similar to that of the Corvette.

- Ford Global Technologies, 2006 patent #7029017, *Wheel suspension for a motor vehicle with a transverse leaf spring*.
- Porsche AG, 2000 patent # 6029987, *Front Axle for a Motor Vehicle*. Describes a strut suspension system supported by a transverse leaf spring system largely the same as that used by the Corvette. The Porsche patent mentions the beneficial stability effects of this arrangement
- Honda, 1992 *Transverse leaf spring type suspension* patent #5141209
- DaimlerChrysler, 2004, patent #6811169, *Composite Spring Design that also Performs the Lower Control Arm Function for a Conventional or Active Suspension System*
- ZF released a concept rear suspension design in October 2009 using a composite spring based rear suspension. The strut based suspension uses a transverse leaf spring to function as both ride and anti-roll spring. The ZF concept differs from the system used on the Corvette by using the leaf spring as one of the suspension links.